contents

Self Protected Motor Starters per UL 508 Type E 3RA6

3RA61 / 3RA62 up to 32 A for mounting rail, surface, comb busbar, infeed system Page

Selection and ordering data

- Direct start, Reversing duty 4/7
- Accessories 4/8-4/12

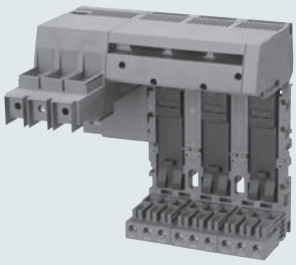

3RA68 up to 100 A for 3RA6 direct and reversing starters Page

Selection and ordering data

- Infeed Components 4/15-4/18
- Accessories 4/19-4/20

Combination starters & starters for group installation 3RA2

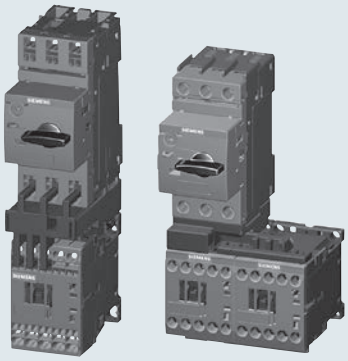

3RA21 and 3RA22 up to 100 A for mounting rail and Fast Bus busbar systems Page

Selection and ordering data

- 3RA22 Reversing duty 4/39-4/42
- 3RA21 Direct start 4/35-4/38
- Accessories 4/43-4/51

Technical data 4/52-4/57
Installation guidelines 4/58-4/67
Circuit diagrams 4/67
Dimension drawings 4/68-4/71

Intelligent 3RA8 Load Feeders and 3RC7 Link Modules

NEW

3RA8 AC-3e and IE3/IE4 ready load feeders and 3RC7 intelligent link module direct starter Page

Selection and ordering data

- 3RA8 Load feeder 4/77
- 3RC7 Link modules 4/82-4/84

3RA8 Intro & configuration 4/72-4/74
3RA8 Catalog no. builder 4/75
3RA8 Technical data 4/76
3RC7 Intro & configuration 4/78-4/80
3RC7 Technical data 4/81

Enclosed controllers 3RE4

3RE4 up to 50Hp @ 460V for non-reversing and reversing applications Page

Selection and ordering data

- Enclosed starters 4/87-4/89
- Enclosed contactors 4/90-4/91

Overload Relay 4/92
Accessories 4/96-4/97
Circuit diagrams 4/99-4/101
Dimension drawings 4/98

Overview

3RA6 fuseless compact starters and infeed system for 3RA6

3RA62 reversing starter

Integrated functionality

The SIRIUS 3RA6 compact starters are a generation of innovative load feeders with the integrated functionality of a motor starter protector, contactor and electronic overload relay.
In addition, various functions of optional mountable accessories (e.g. auxiliary switches, surge suppressors) are already integrated in the SIRIUS compact starter.

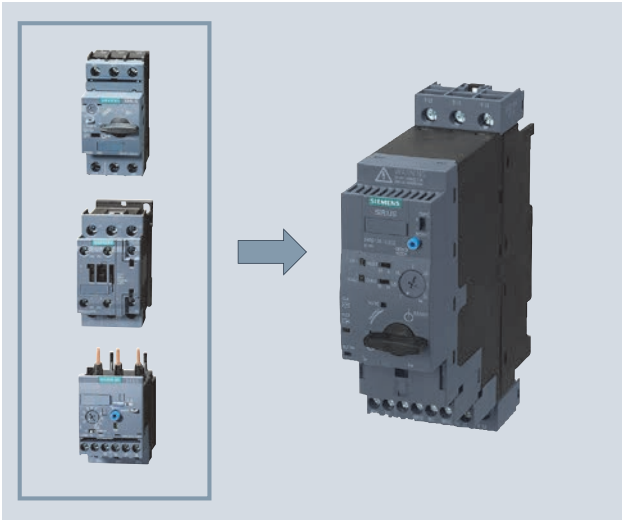

3RA6 compact starters with the integrated functionality of a motor starter protector, contactor and electronic overload relay.

Applications

The SIRIUS compact starters can be used wherever standard three-phase motors up to 32 A (20 HP/460 V) are directly started.

The compact starters are not suitable for the protection of DC loads.

Approvals according to IEC, UL, CSA and CCC standards have been issued for the compact starters.

Low variance of devices

Thanks to wide setting ranges for the rated current and wide voltage ranges, the equipment variance is greatly reduced compared to conventional load feeders.

Very high operational reliability

The high short-circuit breaking capacity and defined shut-down when the end of service life is reached means that the SIRIUS compact starter achieves a very high level of operational reliability that would otherwise have only been possible with considerable additional outlay. This sets it apart from devices with similar functionality.

Safe disconnection

The auxiliary switches (NC contacts) of the 3RA6 compact starters are designed as mirror contacts. This enables their use for safe disconnection - e.g. EMERGENCY STOP up to SIL 1 (IEC 62061) or PL c (ISO 13849-1) or, if used in conjunction with an additional infeed contactor, up to SIL 3 (IEC 62061) or PL e (ISO 13849-1).

Communications integration through AS-Interface

To enable communications integration through AS-Interface there is an AS-i add-on module available in several versions for mounting instead of the control circuit terminals on the SIRIUS compact starter.

The design of the AS-i add-on module permits a group of up to 62 feeders with a total of four cables to be connected to the control system. This reduces wiring work considerably compared to the parallel wiring method.

Communications integration using IO-Link

Up to 4 compact starters in IO-Link version (reversing and direct-on-line starters) can be connected together and conveniently linked to the IO-Link master through a standardized IO-Link connection. The SIRIUS 4SI electronic modules are used e.g. as IO-Link masters for connection to the SIMATIC ET 200S distributed I/O system.

The IO-Link connection enables a high density of information in the local range.

Details of the communications integration using IO-Link, see Chapter 14 Communications.

The diagnostics data of the process collected by the 3RA6 compact starter, e.g. short circuit, end of service life, limit position etc., are not only indicated on the compact starter itself but also transmitted to the higher-level control system through IO-Link.

Thanks to the optionally available operator panel, which can be installed in the control cabinet door, it is easy to control the 3RA6 compact starters with IO-Link from the control cabinet door.

Permanent wiring / easy replacement

Using the SIRIUS infeed system for 3RA6 (see page 4/15) it is possible to carry out the wiring in advance without a compact starter needing to be connected.

A compact starter is very easily replaced simply by pulling it out of the device without disconnecting the wiring.

Even with screw connections or mounting on a standard mounting rail there is no need to disconnect any wiring (on account of the removable main and control circuit terminals) in order to replace a compact starter.

Consistent solution from the infeed to the motor feeder

The SIRIUS infeed system for 3RA6 with integrated PE bar is offered as a user-friendly possibility of feeding in summation currents up to 100 A with a maximum conductor cross-section of 2/0 AWG and connecting the motor cable directly without additional intermediate terminals.

Screw and spring-type terminals

The SIRIUS compact starters and the infeed system for 3RA6 are available with screw and spring-type terminals.

To comply with the clearance and creepage distances demanded according to UL 508 there are the following infeed possibilities:

Type of infeed	Feeder terminal (according to UL 508, type E)	Type
Conventional wiring	Terminal block for "Self-Protected Combination Motor Controller (Type E)"	**3RV29 28-1H**
Three-phase busbars	Three-phase infeed terminal for constructing "Type E Starters", UL 508	**3RV29 25-5EB**
Infeed systems for 3RA6	Infeed on left, 50/70 mm^2, screw terminal with 3 sockets, outgoing terminal with screw/spring-type connections, including PE bar	**3RA68 13-8AB** (screw terminals), **3RA68 13-8AC** (spring-type terminals)

SIRIUS 3RA6 compact starters

The SIRIUS 3RA6 compact starters are universal motor starters according to IEC/EN 60947-6-2. As control and protective switching devices (CPS) they can connect, convey and disconnect the thermal, dynamic and electrical loads from short-circuit currents up to I_q = 53 kA, i.e. they are essentially weld-free. They combine the functions of a motor starter protectors, a contactor and a solid-state overload relay in a single enclosure and can be used wherever standard induction motors up to 32 A (up to approx. 20 HP at 480 V AC) are started directly. Available versions are the direct-on-line starters with 45 mm width and the reversing starters with 90 mm width.

The reversing starter version comes with not only an internal electrical interlock but also with a mechanical interlock to prevent simultaneous actuation of both directions of rotation.

3RA6 compact starters are supplied in 5 current setting ranges. The 3RA61 and 3RA62 have 2 control voltage ranges (AC/DC), the 3RA64 and 3RA65 have one control voltage range (DC):

Current setting range	At 460 V AC for induction motors Standard output P	Rated control supply voltage for 3RA61, 3RA62 compact starters	Rated control supply voltage for 3RA64, 3RA65 compact starters for IO-Link
A	HP	V AC/DC	V DC
0.1 ... 0.4	0.12	24 110 ... 240	24
0.32 ... 1.25	0.43 ... 1.68		
1 ... 4	1.34 ... 5.36		
3 ... 12	4.02 ... 16.1		
8 ... 32	10.7 ... 42.9		

Note:

The 3RA1 motor starters can be used as motor starters > 32 A up to 100 A.

The SENTRON 3VL circuit breakers and the SIRIUS 3RT contactors can be used for motor starters >100 A.

Operating conditions

The SIRIUS 3RA6 compact starters are suitable for use in nearly all climates. They are intended for use in enclosed rooms in which no severe operating conditions (such as dust, caustic vapors, hazardous gases) prevail. Suitable covers must be provided for installation in dusty and damp locations.

The SIRIUS compact starters are generally designed to degree of protection IP20. The permissible ambient temperature during operation is -20 to +60 °C.

The maximum short-circuit current based on UL testing is 30 kA up to 12 A and 15 kA for the 8 ... 32 A versions at 480 V.

Note:

More technical specifications can be found in the system manual at

www.siemens.com/compactstarter

Overload tripping times

The overload tripping time can be set on the device to less than 10 s (CLASS 10) and less than 20 s (CLASS 20 for heavy starting). As the breaker mechanism still remains closed after an overload, resetting is possible by either local manual reset or autoreset after 3 minutes cooling time.

With autoreset there is no need to open the control cabinet.

Diagnostics options

The compact starter provides the following diagnostics options on site:

- With LEDs
  - Connection to the control voltage
  - Position of the main contacts
- With mechanical indication
  - Tripping due to overload
  - Tripping due to short-circuit
  - Tripping due to malfunction (end of service life reached because of worn switching contacts or a worn switching mechanism or faults in the control electronics)

These states can also be evaluated in the higher-level control system:

- With conventional wiring using the integrated auxiliary and signaling switches of the compact starter
- With AS-Interface or IO-Link in even greater detail using the respective communication interface

Four complement variants for 3RA6 compact starters

- For standard mounting rail or screw mounting:
  basic version including 1 pair of main circuit terminals and 1 pair of control circuit terminals
- For standard mounting rail or screw mounting when using the AS-i add-on module:
  comes without control circuit terminals because the AS-i add-on module is attached in lieu of them
- For use with the infeed system for 3RA6:
  without main circuit terminals because they are supplied with the infeed system and the expansion modules
- For use with the infeed system for 3RA6 and AS-i add-on module:
  without main or control circuit terminals as they are not needed
- The control circuit terminals are always required by the compact starters for IO-Link; the main circuit terminals depend on the use of the infeed system.

Additional components of the 3RA6

The two control circuit terminals on the 3RA61/3RA62 allow access to signalling contacts for overload (1 CO) and short-circuit / malfunction (1 NO). Furthermore, the 3RA61 has two auxiliary contacts (1 NO + 1 NC) for indicating the position of the main contacts, while the 3RA62 has one auxiliary contact (1 NO) per direction of rotation per main contact.

Function

Trip units

The SIRIUS 3RA6 compact starters are equipped with the following trip units:
- Inverse-time delayed solid-state overload release
- Instantaneous electronic trip unit (electromagnetic short-circuit release)

The overload releases can be adjusted in accordance with the load current.

The electronic trip units are permanently set to a value 13 times the maximum rated current of the 4 A, 12 A and 32 A starter and thus enable trouble-free starting of motors.

Trip classes

The trip classes of electronically delayed trip units are based on the tripping time (t_A) at 7.2 times the set current in the cold state (excerpt from IEC 60947-4):

CLASS 10: 4s < t_A < 10 s

CLASS 20: 6s < t_A < 20 s (for heavy starting)

The compact starter must trip within this time.

Disconnection due to malfunction

The following malfunctions can be detected:
- End of service life
  - Worn switching contacts (for electrical endurance see "Technical data")
  - Worn switching mechanisms (for mechanical endurance see "Technical data")
- Faults in the control electronics

Short-circuit protection

If a short-circuit occurs, the short-circuit releases of the SIRIUS 3RA6 compact starters isolate the faulty motor starter from the network and thus prevent further damage. The short-circuit releases are factory-set to 14 times the value of the maximum rated current I_n of the device.

The SIRIUS compact starters have a short-circuit breaking capacity up to 30 kA at a voltage of 480 V AC.

Overload relay function

In the event of an overload, the compact starter switches off without the breaker mechanism being opened.

The overload trip can be signaled to the higher-level control system through an integrated signal switch.

The overload signal can be reset automatically or by means of a manual reset.

Control through AS-Interface

For control through AS-Interface, the AS-i add-on module is mounted instead of the two control circuit terminals on the SIRIUS 3RA6 compact starters (direct-on-line starters and reversing starters).

The AS-i auxiliary voltage and the AS-i data line are installed on the AS-i add-on module easily and quickly without tools by means of two plug-in connector blocks with insulation displacement connection.

The AS-i add-on module is equipped with the latest A/B technology and has an addressing socket onboard.

An addressing unit is required and can be ordered for addressing the AS-i add-on module.

Bit assignment (see below) is similar to that for the SIRIUS motor starters, which means that the same programming can be used here.

DI 0.0 ready
DI 0.1 motor on
DI 0.2 group fault
DI 0.3 group warning

DO 0.0 motor on or motor clockwise
DO 0.1 motor counterclockwise

A 24 V DC PELV power supply unit according to EN 61140 safety class III is required for the auxiliary voltage.

The AS-i data line is supplied with voltage by means of a 30 V DC AS-i power supply unit and is controlled by means of the AS-i master.

The AS-i add-on modules are available in the following five versions:
- AS-i add-on module for compact starters
- AS-i add-on module for compact starters with two local inputs for safe disconnection of the "clockwise rotation" or "counter-clockwise rotation" outputs
- AS-i add-on module with two free external inputs
- AS-i add-on module with two free external outputs
- AS-i add-on module with one free external input and output

The AS-i add-on module can only be used with compact starters with a control voltage of 24 V AC/DC.

Integrated auxiliary switches

The control circuit terminals of the SIRIUS 3RA6 compact starters have the following connections:
- A1/A2 for the control voltage for 3RA61,
  A1/A2 and B1/B2 for the control voltage for 3RA62
- "Overload" signal switch
- "Fault" signal switch, e. g. "short-circuit"
- Internal auxiliary switch for position of the main contacts (in case of direct-on-line starters: 1 NO + 1 NC with mirror contact to the main contact; in case of reversing starters: 2 NO)

Design

Mounting

The 3RA6 compact starters can be mounted in 4 ways:

1) By snapping onto a TH 35 standard mounting rail

The SIRIUS compact starters can be snapped onto a standard mounting rail according to EN 60715 with a width of 35 mm.

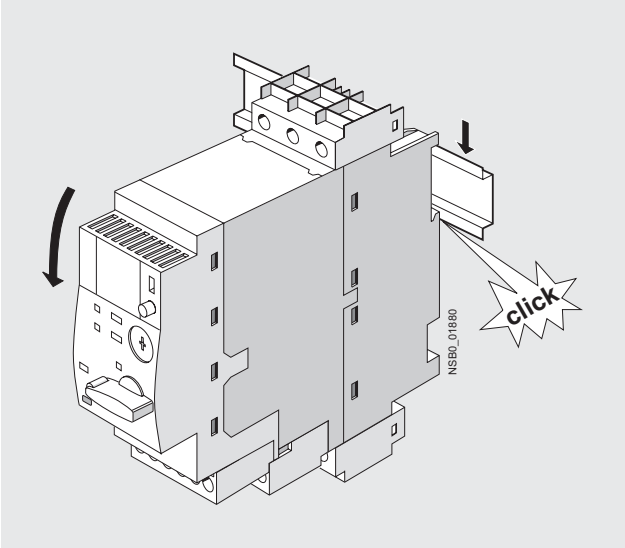

2) By screw fixing to a flat surface

The SIRIUS compact starters are suitable for screw fixing to a flat surface. One set of 3RA69 40-0A adapters for screw connection (including push-in lugs) is required per direct-on-line starter, two sets are required per reversing starter.

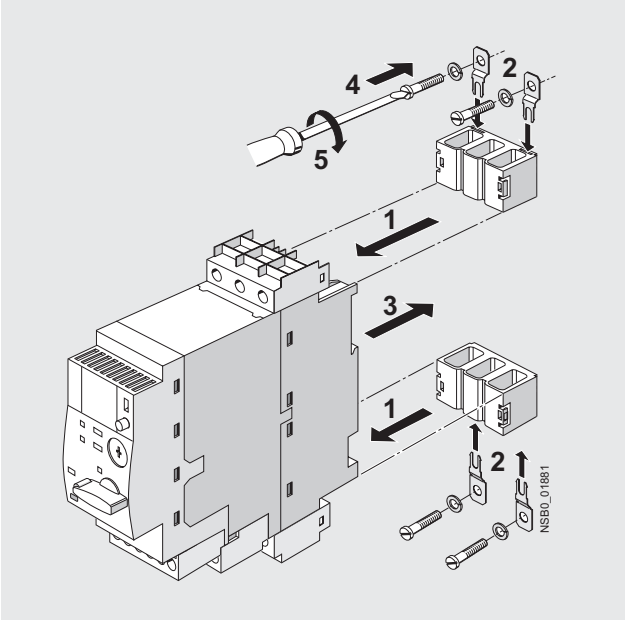

1 ... 5: order of mounting steps

3) By integrating in the infeed system for 3RA6

The SIRIUS compact starters can be assembled with the infeed system for 3RA6 (see "Infeed system for 3RA6").

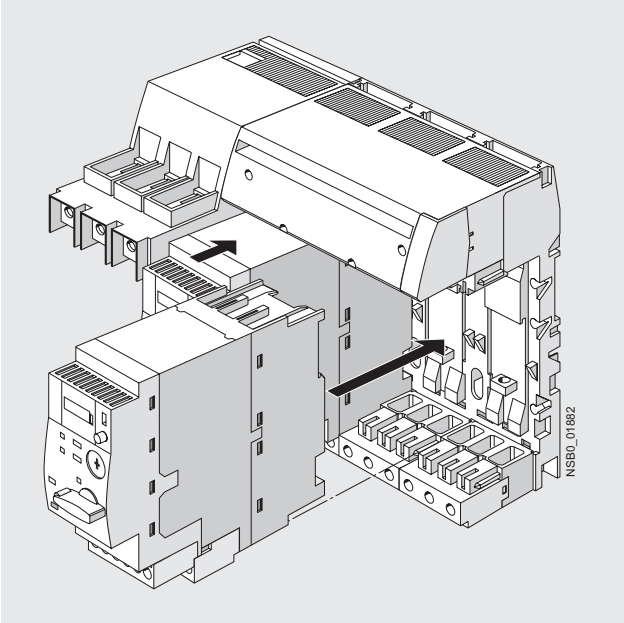

4) By using the 8US busbar adapter for Fast Bus systems with 60 mm busbar center-to-center clearance

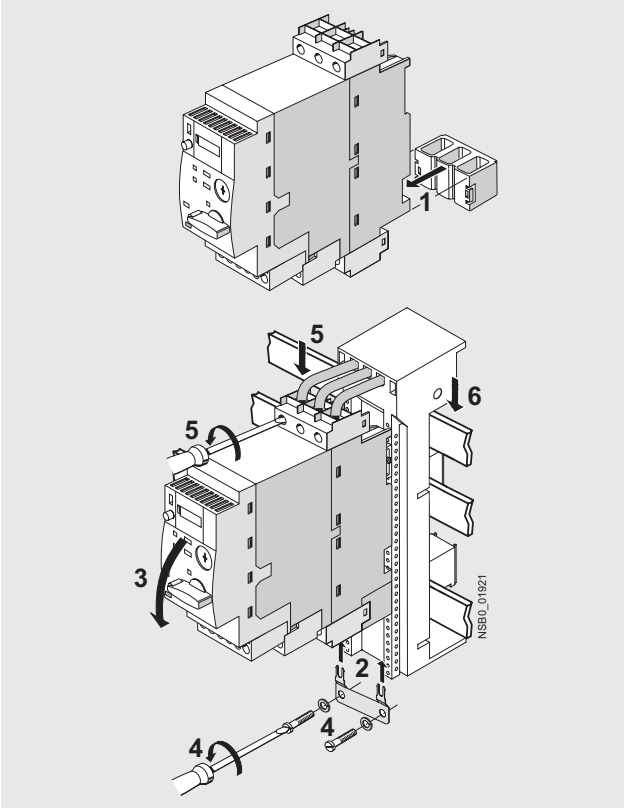

1 ... 6: order of mounting steps

4a) By using an additional device holder in the case of reversing starters

When the 8US busbar adapter is used on Fast Bus systems with 60 mm busbar center-to-center clearance, a device holder is needed in addition for a reversing starter on account of its double width.

The reversing starter is mounted in the same way as the direct-on-line starter on the busbar adapter. Then the device holder is snapped on alongside the busbar adapter.

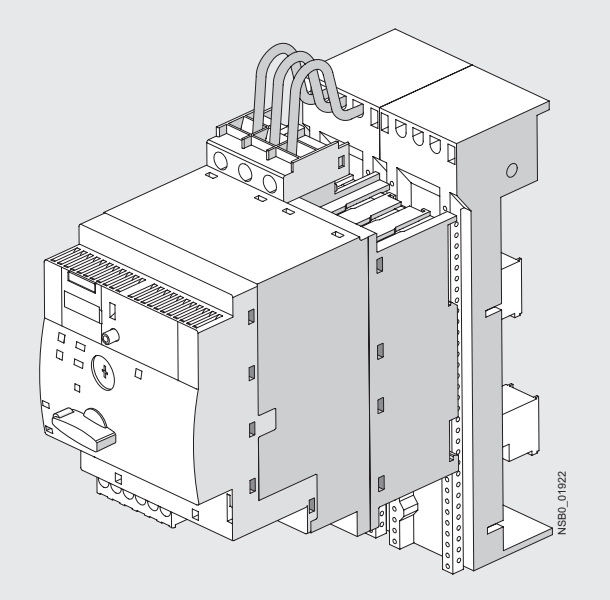

Mounting regulations

The module can be installed horizontally or vertically. For the different installations attention must be paid however to limit values for protective separation according to IEC/EN 60947-2 of the compact starters (for details see the "Technical specifications").

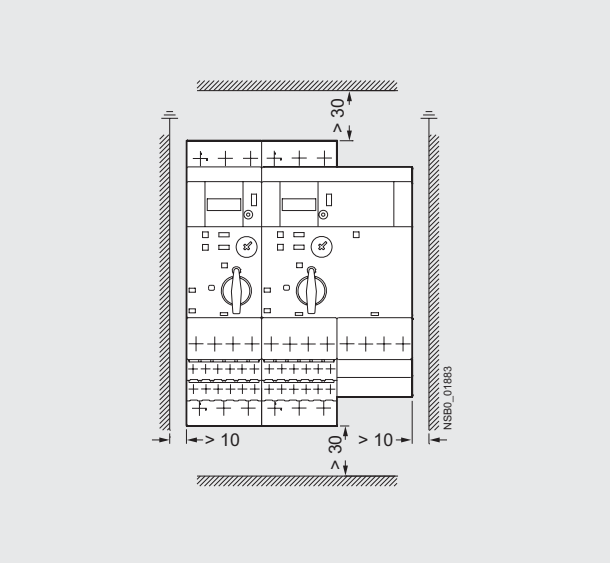

The following distances must be observed when mounting the compact starters:
- Lateral clearance to grounded components: 10 mm
- Arcing space at top and bottom: 30 mm

Selection and ordering data

3RA61 20-1CB32

3RA61 20-2EB32

Width 45 mm
One set of 3RA69 40-0A adapters is required for screw fixing.

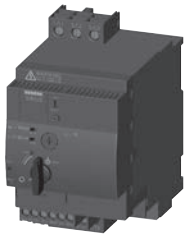

3RA62 50-1CP32

3RA62 50-1CP32

Width 90 mm
One set of 3RA69 40-0A adapters is required for screw fixing.

Standard induction motor 4-pole at 400 V AC[1] Standard output *P*	Setting range for solid-state overload release	Order No.	Order No.
HP	A		
For use with the infeed system for 3RA6 and with the AS-i add-on module or as a replacement device, without main and control circuit terminals			
--	0.1 ... 0.4	**3RA6□□0-0A □32**	–
1/2	0.32 ... 1.25	**3RA6□□0-0B □32**	–
2	1 ... 4	**3RA6□□0-0C □32**	–
7 1/2	3 ... 12	**3RA6□□0-0D □32**	–
20	8 ... 32	**3RA6□□0-0E □32**	–
		Screw terminals[2]	**Spring-type terminals**
For standard mounting rail or screw mounting, including 1 pair of main circuit terminals and 1 pair of control circuit terminals			
--	0.1 ... 0.4	**3RA6□□0-1A □32**	**3RA6□□0-2A □32**
1/2	0.32 ... 1.25	**3RA6□□0-1B □32**	**3RA6□□0-2B □32**
2	1 ... 4	**3RA6□□0-1C □32**	**3RA6□□0-2C □32**
7 1/2	3 ... 12	**3RA6□□0-1D □32**	**3RA6□□0-2D □32**
20	8 ... 32	**3RA6□□0-1E □32**	**3RA6□□0-2E □32**
For use in the infeed system for 3RA6, without main circuit terminals, with 1 pair of control circuit terminals			
--	0.1 ... 0.4	**3RA6□□0-1A □33**	**3RA6□□0-2A □33**
1/2	0.32 ... 1.25	**3RA6□□0-1B □33**	**3RA6□□0-2B □33**
2	1 ... 4	**3RA6□□0-1C □33**	**3RA6□□0-2C □33**
7 1/2	3 ... 12	**3RA6□□0-1D □33**	**3RA6□□0-2D □33**
20	8 ... 32	**3RA6□□0-1E □33**	**3RA6□□0-2E □33**
For standard mounting rail or screw mounting when using the AS-i add-on module with 1 pair of main circuit terminals, without control circuit terminals			
--	0.1 ... 0.4	**3RA6□□0-1A □34**	**3RA6□□0-2A □34**
1/2	0.32 ... 1.25	**3RA6□□0-1B □34**	**3RA6□□0-2B □34**
2	1 ... 4	**3RA6□□0-1C □34**	**3RA6□□0-2C □34**
7 1/2	3 ... 12	**3RA6□□0-1D □34**	**3RA6□□0-2D □34**
20	8 ... 32	**3RA6□□0-1E □34**	**3RA6□□0-2E □34**

Order No. supplements for rated control supply voltage

• Direct-on-line starter	**12**	**12**
• Reversing duty starter	**25**	**25**
• 24 V AC/DC (for combining with AS-I add-on module)	**B**	**B**
• 110 … 240 V AC/DC	**P**	**P**

[1] Selection depends on the motor full load amps. Horse Power ratings provided for reference only.

[2] A set of 3RA69 40-0A adapters is required for screw mounting.

Overview

Accessories for SIRIUS 3RA6 compact starters

The following accessories are available for the 3RA6 compact starters:

- AS-i add-on module: see AS-Interface Add-On Modules for 3RA6, page 4/13
- External auxiliary switch blocks: Snap-on auxiliary switch as versions 2 NO, 2 NC and 1 NO +1 NC with screw or spring-type connections; the contacts of the auxiliary switch block open and close jointly with the main contacts of the compact starter. The NC contacts are designed as mirror contacts.
- Control kit: aid for manually closing the main contacts in order to evaluate the wiring and motor direction under conditions of short-circuit protection
- Adapter for screw mounting the compact starter, including push-in lugs
- Main circuit terminals: Available in screw and spring-type terminals
- Main circuit terminals for mixed connection method:
  With the main circuit terminal for the mixed connection method it is also possible in the main circuit to change over from the screw connection method on the incoming side to the spring-type connection method on the outgoing side.
  This enables for example the side-by-side mounting of several compact starters and their cost-effective connection using the three-phase busbars on the infeed side. The motors are then directly connected by the quick and reliably contacting spring-type connection method.

Accessories for UL applications

The terminal block for "Self-Protected Combination Motor Controller", type E is available for complying with the clearance and creepage distances according to UL 508.

Accessories for infeed using three-phase busbar systems

The three-phase busbars can be used as an easy, time-saving and clearly arranged means of feeding SIRIUS 3RA6 compact starters with screw connection. Motor starter protectors size S00 and S0 can also be integrated.

The busbars are suitable for between 2 and 5 devices. However, any kind of extension up to a maximum summation current of 63 A is possible by clamping the terminals of an additional busbar (rotated by 180°) underneath the terminals of the respective last motor circuit protector.

A connecting piece is required for the combination with motor starter protector size S00. S00 and S0 motor starter protectors of the 3RV2 series do not require the additional connecting piece. The motor starter protectors are supplied by appropriate feeder terminals. Special feeder terminals are required for constructing "Type E Starters" according to UL/CSA.

The three-phase busbar systems are finger-safe but empty connection terminals must be fitted with covers. They are designed for any short-circuit stress which can occur at the output side of connected SIRIUS 3RA6 compact starters or motor starter protectors.

8US Fast Bus busbar adapters for 60 mm systems

The compact starters are mounted directly with the aid of busbar adapters on the Fast Bus busbar systems with 60 mm center-to-center clearance in order to save space and to reduce infeed times and costs. These starters are suitable for copper busbars with a width from 12 to 30 mm. The busbars can be 4 to 5 mm or 10 mm thick.

The 8US Fast Bus busbar system can be loaded with a maximum summation current of 630A.

The "reversing starter" version requires a device holder along side the busbar adapter for lateral mounting.

The compact starters are snapped onto the adapter and connected on the line side. This prepared unit is then plugged directly onto the busbar system, and is thus connected both mechanically and electrically at the same time.

For more accessories such as incoming and outgoing terminals, flat copper profiles etc., see Section 5 “Fastbus Busbar Systems”.

Accessories for operation with closed control cabinet doors

Door-coupling rotary operating mechanisms for standard and emergency-stop applications are available for operating the compact starter with closed control cabinet doors.

Accessories for SIRIUS 3RA6 compact starters in IO-Link version

The following accessories are available specifically for the 3RA64, 3RA65 compact starters:

- The 4SI SIRIUS solid-state module as IO-Link master allows for the simple and economical connection of SIRIUS controls with IO-Link (e.g up to four groups of 4 compact starters) to the multifunctional SIMATIC ET 200S distributed I/O system.
- Additional connection cables for side-by-side mounting of up to 4 compact starters
- Operator panel for local control and diagnostics of up to 4 compact starters coupled to each other

Selection and ordering data

	Version	Order No.	Std. pack qty.	Weight approx. kg
Accessories for 3RA6 compact starters				
3RA69 50-0A	**Control kits** For mechanical actuation of the compact starter	**3RA69 50-0A**	1 unit	0.004
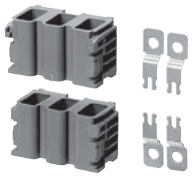 3RA69 40-0A	**Adapters for screw mounting the compact starter** (set including push-in lugs) Direct-on-line starters require 1 set, reversing starters 2 sets.	**3RA69 40-0A**	1 unit	0.152
		Screw terminals		
3RA69 11-1A	**Auxiliary switch blocks for compact starters**			
	• 2 NO	**3RA69 11-1A**	1 unit	0.018
	• 2 NC	**3RA69 12-1A**	1 unit	0.018
	• 1 NO +1 NC (these auxiliary contacts are positively driven.)	**3RA69 13-1A**	1 unit	0.018
3RA69 20-1A	**Main circuit terminals** (line and load side)	**3RA69 20-1A**	1 unit	0.038
3RA69 20-1B	**Control circuit terminals**			
	• For 3RA61	**3RA69 20-1B**	1 unit	0.042
	• For 3RA62	**3RA69 20-1C**	1 unit	0.042
		Spring-type terminals		
3RA69 11-2A	**Auxiliary switch blocks for compact starters**			
	• 2 NO	**3RA69 11-2A**	1 unit	0.018
	• 2 NC	**3RA69 12-2A**	1 unit	0.018
	• 1 NO +1 NC (these auxiliary contacts are positively driven.)	**3RA69 13-2A**	1 unit	0.018
3RA69 20-2A	**Main circuit terminals** (line and load side)	**3RA69 20-2A**	1 unit	0.049
3RA69 20-2B	**Control circuit terminals**			
	• For 3RA61	**3RA69 20-2B**	1 unit	0.036
	• For 3RA62	**3RA69 20-2C**	1 unit	0.036

Accessories for 3RA6 compact starters (continued)

Version	Order No.	Std. pack qty.	Weight approx. kg
Main circuit terminals for mixed connection method One set comprises: • 1 joint block on the line side for the screw connection method • 1 joint block on the motor side for the spring-type connection method	**3RA69 20-3A**	1 unit	0.044

3RA69 20-3A

Accessories specifically for 3RA64, 3RA65 compact starters with IO-Link

Version	Order No.	Std. pack qty.	Weight approx. kg
Additional connection cables (flat) for side-by-side mounting of up to 4 compact starters			
• 10-pole			
- 8 mm[1]	**3RA69 32-0A**	5 units	0.007
- 200 mm[1]	**3RA69 33-0B**	5 units	0.012
• 14-pole			
- 8 mm[2]	**3RA69 31-0A**	5 units	0.007
- 200 mm	**3RA69 33-0C**	5 units	0.014
Operator panels - 1 operator panel - 1 enabling module - 1 interface cover - 1 fixing terminal	**3RA69 35-0A**	1 unit	0.052
Enabling block	**3RA69 36-0A**	1 unit	0.002
Blanking covers	**3RA69 36-0B**	5 units	0.001
Connection cable (round) for connecting the operator panel 10-pole, 2000 mm	**3RA69 33-0A**	1 unit	0.114
SIRIUS 4SI solid-state modules IO-Link master for connection of up to 4 SIRIUS controls (max. 16 in groups of 4) with IO-Link (3-wire connection) to SIMATIC ET 200S, width 15 mm, supports firmware update (STEP 7 V5.4 SP5 and higher) Can be used with the following terminal modules: • TM-E15S26-A1 (screw terminals) • TM-E15C26-A1 (spring-type terminals) • TM-E15N26-A1 (Fast Connect)	**3RK1 005-0LB00-0AA0**	1 unit	0.057

3RA69 31-0A

3RA69 35-0A

3RK1 005-0LB00-0AA0

[1] 10-pole connection cables are required for EMERGENCY-STOP group concepts.

[2] Is included in the scope of supply of the SIRIUS 3RA6 compact starter in IO-Link version.

Terminal blocks and phase barriers for "Self-Protected Combination Motor Controllers (Type E)" according to UL 508

Note:
UL 508 demands 1-inch clearance and 2-inch creepage distance on the line side for "Combination Motor Controller Type E". The following terminal blocks or phase barriers must be used in 3RV20 motor starter protectors.

The terminal blocks or phase barriers cannot be used in combination with the 3RV19 .5 three-phase busbars.

For construction with three-phase busbars, see "Busbar accessories".

Version		Order No.	Std. pack qty.	Weight approx. kg
Terminal blocks type E For extended clearance and creepage distances (1 and 2 inch)	S00, S0	**3RV29 28-1H**	1 unit	0.065

3RV29 28-1H

Three-phase busbars[1]

For feeding several motor starter protectors with screw terminals, mounted side by side on standard mounting rails, insulated, with touch protection

3RV1915-1AB

3RV1915-1BB

3RV1915-1CB

3RV1915-1DB

Modular spacing	Number of motor starter protectors that can be connected: Without lateral accessories	With lateral auxiliary switch	With auxiliary release	Rated current I_n at 690 V	For motor starter protectors	Order No.	Std. pack qty.	Weight approx.
mm				A	Size			
45[3]	2	--	--	63	S00, S0[2]	**3RV1915-1AB**	1 unit	0.044
	3	--	--	63	S00, S0[2]	**3RV1915-1BB**	1 unit	0.071
	4	--	--	63	S00, S0[2]	**3RV1915-1CB**	1 unit	0.099
	5	--	--	63	S00, S0[2]	**3RV1915-1DB**	1 unit	0.124
55[4]	--	2	--	63	S00, S0[2]	**3RV1915-2AB**		
	--	3	--	63	S00, S0[2]	**3RV1915-2BB**		
	--	4	--	63	S00, S0[2]	**3RV1915-2CB**		
	--	5	--	63	S00, S0[2]	**3RV1915-2DB**		
	2	--	--	108	S2	**3RV1935-1A**		
	3	--	--	108	S2	**3RV1935-1B**		
	4	--	--	108	S2	**3RV1935-1C**		
63[5]	--	--	2	63	S00, S0[2]	**3RV1915-3AB**		
	--	--	4	63	S00, S0[2]	**3RV1915-3CB**		
75[5]	--	2	2	108	S2	**3RV1935-3A**		
	--	3	3	108	S2	**3RV1935-3B**		
	--	4	4	108	S2	**3RV1935-3C**		

1) Not suitable for 3RV21 motor starter protectors for motor protection with overload relay function and for 3RV27 and 3RV28 circuit breakers according to UL 489/CSA C22.2 No. 5.

2) Approved for motor starter protectors size S0 with $I_n \leq 32$ A.

3) For 3RV2 motor starter protectors without accessories mounted on the side.

4) For 3RV2 motor starter protectors with auxiliary switches with 1 NO + 1 NC, 2 NO and 2 NC mounted on the left (9 mm wide).

5) For 3RV2 motor starter protectors with mounted accessories (18 mm wide). Auxiliary switches with 2 NO + 2 NC or signaling switch (mounted on the left) or with auxiliary release (mounted on the right).

Three-phase infeed terminals

3RV2925-5AB

3RV2935-5A

Conductor cross-section: Solid or stranded	Finely stranded with end sleeve	AWG cables, solid or stranded	Tightening torque	For motor starter protectors/ circuit breakers	Order No.	Weight approx.
mm²	mm²	AWG	Nm	Size		
Connection from top						
2.5 ... 25	2.5 ... 16	10 ... 4	3 ... 4	S00, S0	**3RV2925-5AB**	0.043
2 x (2.5 ... 50)[1], 1 x (2.5 ... 70)[1]	2 x (2.5 ... 35)[1], 1 x (2.5 ... 50)[1]	2 x (10 ... 1/0)[1], 1 x (10 ... 2/0)[1]	4 ... 6	S2 NEW	**3RV2935-5A**	

3RV2915-5B

Connection from below This terminal is connected in place of a switch, please take the space requirement into account.						
2.5 ... 25	2.5 ... 16	10 ... 4	Input: 4, Output: 2 ... 2.5	S00, S0	**3RV2915-5B**	0.093

Three-phase infeed terminals for constructing "Type E Starters"

3RV2925-5EB

3RV2935-5E

Connection from top						
2.5 ... 25	2.5 ... 16	10 ... 4	3 ... 4	S00, S0	**3RV2925-5EB**	0.044
2 x (2.5 ... 50)[1], 1 x (2.5 ... 70)[1]	2 x (2.5 ... 35)[1], 1 x (2.5 ... 50)[1]	2 x (10 ... 1/0)[1], 1 x (10 ... 2/0)[1]	4 ... 6	S2 NEW	**3RV2935-5E**	

1) If two different conductor cross-sections are connected to one clamping point, both cross-sections must be in the range specified.

	Version	Order No.	Std. pack qty.	Weight approx. kg
8US Fast Bus busbar adapters for 60 mm systems				
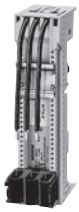 8US12 11-1NS10	For flat copper profiles according to DIN 46433 Width: 12 ... 30 mm Thickness: 4 ... 5 mm or 10 mm	**8US12 11-1NS10**	1 unit	0.337
Device holders for lateral mounting along side the Fast Bus busbar adapter for 60 mm systems				
8US12 50-1AA10	Required in addition to the busbar adapter for mounting a reversing starter	**8US12 50-1AA10**	1 unit	0.239

	Version	Color of handle	Version of extension shaft mm	Order No.	Std. pack qty.	Weight approx. kg
Door-coupling rotary operating mechanisms for operating the compact starter with closed control cabinet doors						
3RV29 26-0B	The door-coupling rotary operating mechanisms consist of a knob, a coupling driver and an extension shaft of 130/330 mm in length (6 mm x 6 mm). The door-coupling rotary operating mechanisms are designed to degree of protection IP65. The door interlocking prevents accidental opening of the control cabinet door in the ON position of the motor starter protector. The OFF position can be locked with up to 3 padlocks.					
	Door-coupling rotary operating mechanisms	Black	130	**3RV29 26-0B**	1 unit	0.111
	EMERGENCY-STOP door-coupling rotary operating mechanisms	Red/ Yellow	130	**3RV29 26-0C**	1 unit	0.110

	Version	Order No.	Std. pack qty.	Weight approx. kg
Tools for opening spring-type terminals by hand				
3RA29 08-1A	**Screwdrivers** for all SIRIUS devices with spring-type terminals Length approx. 200 mm, 3.0 mm x 0.5 mm, titanium gray/black, partially insulated	**Spring-type terminals** **3RA29 08-1A**	1 unit	0.045
Blank labels				
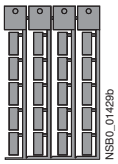 3RT19 00-1SB20	**Unit labeling plates**[1)] for SIRIUS devices 20 mm x 7 mm, titanium gray	**3RT29 00-1SB20**	340 units	0.200

[1)] PC labeling system for individual inscription of unit labeling plates available from: Murrplastik Systems, Inc. www.murrplastik.com.

Overview

Various AS-i add-on modules are available for communication of the 3RA6 compact starter with the control system using AS-Interface:

- Standard version
- With two local inputs
- With two free external inputs
- With one free external input and one free external output
- With two free external outputs
- For local control

The AS-i add-on modules can be combined only in connection with compact starters with a rated control supply voltage of 24 V AC/DC.

AS-i add-on module for communications controlling

With this new module it is also possible for the connected compact starter to be operated directly using simple switches, i.e. without recourse to AS-i Communication, if required.

"Automatic" mode

NC contacts can be connected to the inputs Y2 and Y4 through the local terminals on the AS-i add-on module. If the "+" connections are connected simultaneously to both local inputs, the AS-i add-on module will be in "Automatic" mode, i.e. it will communicate with the control system through AS-Interface.

Local control

Opening the two inputs Y2 and Y4 will result in the direct disconnection of the compact starter. Operation through AS-i Communication is ended and the compact starter can now be switched on and off directly using NO contacts (one NO contact per direction of rotation on the reversing starter).

"LED AUX Power" must light up green, the 24 V DC supply must be connected and the AS-i control supply voltage must no longer be applied.

Resetting to "Automatic" mode

Simultaneous application of a "1" signal at the local inputs. The availability bit DI 0 is switched to a "1" signal.

If AS-i Communication is reset, the motor is first switched off and then on again when requested by the control system.

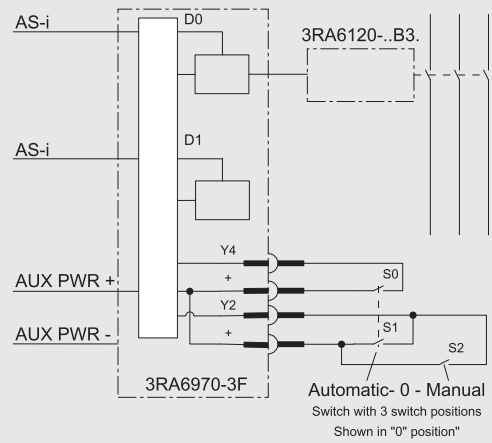

Switch with 3 switch positions			
Switch	Automatic	0	Manual
S0	Closed	Open	Open
S1	Closed	Open	Open
S2	Open	Open	Closed

NSB0_02096

Circuit diagram example for operating a 3RA61 20 direct-on-line starter using an AS-i add-on module for on-site controller

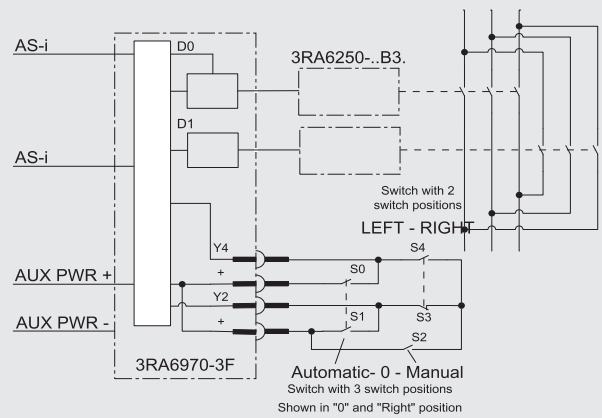

Switch with 3 switch positions			
Switch	Automatic	0	Manual
S0	Closed	Open	Open
S1	Closed	Open	Open
S2	Open	Open	Closed

Switch with 2 switch positions		
Switch	Left	Right
S3	Open	Closed
S4	Closed	Open

NSB0_02097

Circuit diagram example for operating a 3RA62 50 reversing starter using an AS-i add-on module for on-site controller

Selection and ordering data

	Version	Order No.	Std. pack qty.	Weight approx. kg
AS-i add-on modules				
3RA69 70-3A	**Standard version** For communication of the compact starter with the control system using AS-Interface	**3RA69 70-3A**	1 unit	0.045
	With two local inputs For safe disconnection through local safety relays, e.g. cable-operated switches	**3RA69 70-3B**	1 unit	0.045
3RA69 70-3B to -3F	**With two free external inputs** Replaces the digital standard inputs "Motor On" and "Group warning"	**3RA69 70-3C**	1 unit	0.045
	With one free external input and one free external output Replaces the digital standard input "Group warning"	**3RA69 70-3D**	1 unit	0.045
	With two free external outputs Only for direct-on-line starters, replaces the digital standard output "Motor left"	**3RA69 70-3E**	1 unit	0.045
	For local control Control of the compact starter optionally using AS-Interface or local switches	**3RA69 70-3F**	1 unit	0.045
Spare parts for AS-i add-on modules				
	Connectors for data and auxiliary supply cable with 2 insulation displacement terminations for standard litz wires 2 x 0.5 ... 0.75 mm²			
	• Flat, yellow, extender	**3RK1901-0NA00**	5 units	
	• Flat, black, extender	**3RK1901-0PA00**	5 units	
Accessories for AS-i add-on modules				
3RK1904-2AB02	**AS-Interface addressing unit V 3.0** • For AS-Interface modules and sensors and actuators with integrated AS-Interface in accordance with AS-i Specification V3.0 • For setting the AS-i address of standard slaves, and slaves with extended addressing mode (A/B slaves) • With input/output test function and many other commissioning functions • Battery operation with 4 batteries type AA (IEC LR6, NEDA 15) • Scope of supply: - Addressing unit with 4 batteries - Addressing cable, with M12 plug to addressing plug (hollow plug), length 1.5m	**3RK1904-2AB02**	1 unit	0.540

Overview

The infeed system for 3RA6 compact starters enables far less wiring in the main circuit and, thanks to the easy exchangeability of the compact starters, reduces the usual downtimes for maintenance work during the plant's operating phase.

The infeed system provides the possibility of completely prewiring the main circuit without a compact starter needing to be connected at the same time. As the result of the removable terminals in the main circuit, compact starters can be integrated in an infeed system in an easy manner (without the use of tools).

In addition, the integrated PE bar means it is optionally possible to connect the motor cable directly to the infeed system without additional intermediate terminals. The infeed system for 3RA6 compact starters is designed for summation currents up to 100 A with a conductor cross-section of max. 2/0 AWG on the feeder terminal block.

The infeed system can be mounted on a standard mounting rail or flat surfaces.

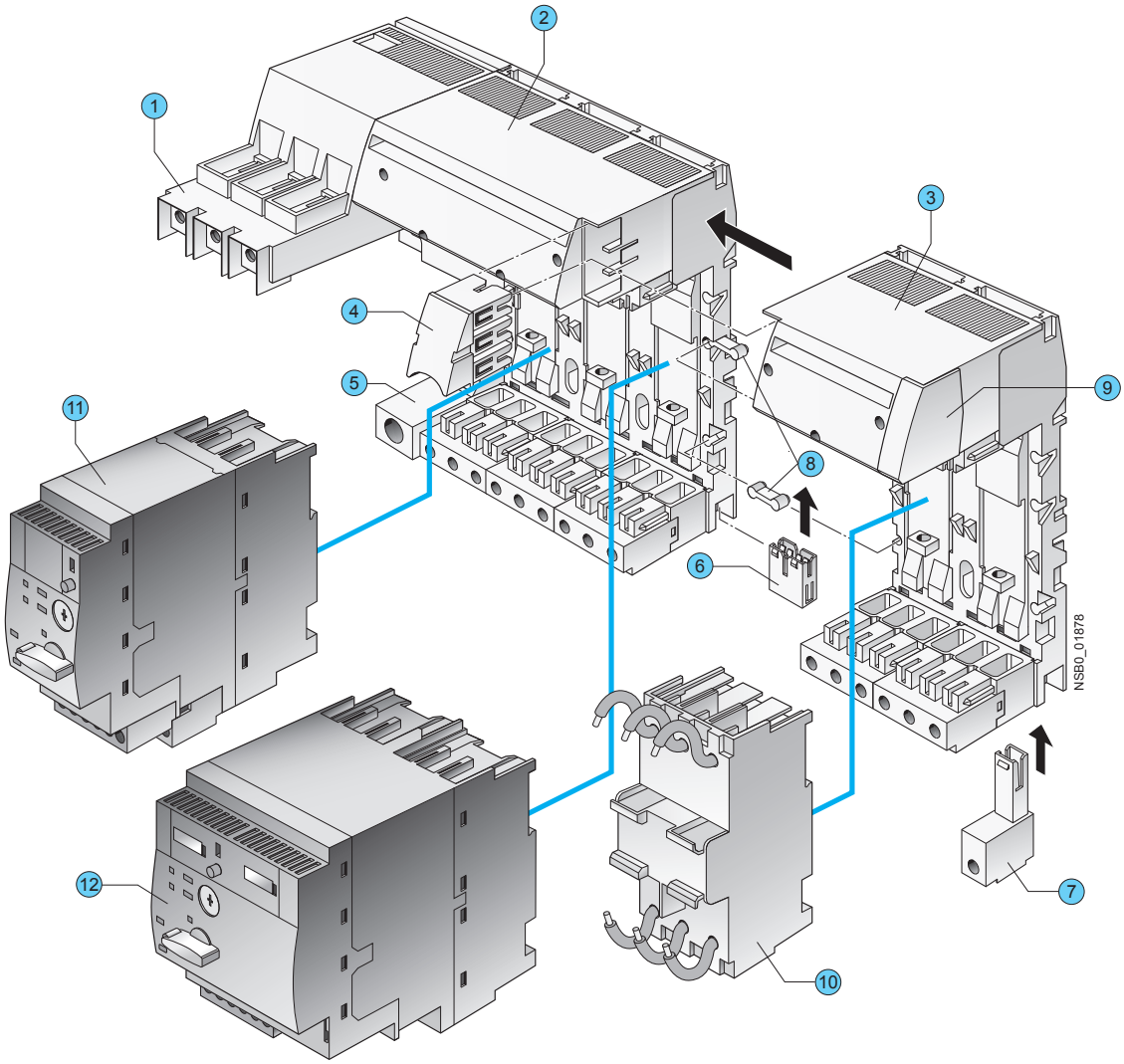

1 Feeder terminal
2 Three-socket expansion module
3 Two-socket expansion module
4 Expansion plug
5 PE infeed
6 PE expansion plug
7 PE tap-off
8 Connecting plates
9 End cover
10 45 mm adapter for SIRIUS motor starter protector size S0
11 3RA61 direct-on-line starter
12 3RA62 reversing starter

Infeed system for 3RA6 compact starters

Infeed systems for 3RA6 – up to 100 A

1 Infeed

The 3-phase infeed is available as an infeed with screw connection (4-2 AWG up to 63 A or 0-2/0 AWG up to 100 A) and a an infeed with spring-type connection (4-2 AWG up to 63 A).

The infeed with spring-type terminal can be attached to the left side, as well as the right side, of an expansion module.

The screw terminal infeeds are permanently fitted to the left side of a 3-socket expansion module.

The infeeds with screw connection enable connection of the main conductors (L1, L2, L3) either from above or from below.

The infeeds with screw connection come packaged with 1 end cover, while the infeed with spring-type connection comes packaged with 2 end covers.

2 Three-socket expansion modules

The expansion module with 3 sockets for compact starters is available with screw connection and with spring-type connection.

Expansion modules enable the infeed system to be expanded and can be connected to each other in any number up to a maximum length of 1.2 meters.

Two expansion modules are held together with the help of 2 connecting plates and 1 expansion plug. These assembly parts are included in the scope of supply of the respective expansion module.

When the infeed system for 3RA6 compact starters is used, the compact starters (plug-in modules) are easily mounted and removed even when live.

Optional possibilities:
- PE connection on motor starter side
- Outfeed for external auxiliary devices
- Connection to 3RV29 infeed system
- Integration of SIRIUS 3RV1 and 3RV2 motor starter protectors size S0 up to 25 A (using 3RA68 90-0BA adapter)

3 Two-socket expansion modules

If only 2 instead of 3 additional sockets are required, then the 2-socket expansion module is the right choice. It has the same functionality as the 3-socket expansion module.

4 Expansion plug

Two expansion modules can be connected together using the expansion plug. Flexible expansion of the infeed system is thus possible.

5 PE infeeds

This module enables a PE cable to be connected.

The PE infeed can be ordered with screw connection and spring-type connection (2 AWG) and can be fitted on the right or left to the expansion block.

6 PE expansion plug

The PE expansion plug is inserted from below and enables two PE bars to be connected.

7 PE tap-off

The PE tap-off is available with screw connection and spring-type connection (10-8 AWG). It is snapped into the infeed system from below.

8 Connecting plates

Two connecting plates are used to hold together 2 adjacent expansion modules.

9 End covers

On the last expansion module of a row, the slot provided for the expansion plug can be covered by inserting the end cover.

10 45 mm adapters for SIRIUS 3RV motor starter protectors

SIRIUS 3RV1 and 3RV2motor starter protectors size S0 with screw connection can be fitted to the adapter, enabling them to be plugged into the infeed system.

Terminal blocks

Using the terminal block, three phase power can be fed out of the infeed system; this means that single-phase, two-phase and three-phase components can also be integrated in the system.

If the end cover is removed, the terminal block can be inserted into an expansion module.

Expansion plug for SIRIUS 3RV29 infeed systems

If the end cover is removed, the expansion plug for the SIRIUS 3RV29 infeed system can be inserted into an expansion module. It connects the infeed system for 3RA6 compact starters with the SIRIUS 3RV29 infeed system.

Maximum rated operational current

The following maximum rated operational currents apply for the components of the infeed system for 3RA6:

Component	Maximum rated operational current A
Infeed with screw connection 0-2/0 AWG	100
Infeed with screw connection 4-2 AWG	63
Infeed with spring-type connection 4-2 AWG	63
Expansion plugs	63

When several expansion modules are mounted side by side, the maximum rated operational current from the 2nd expansion module to the end of the row is 63 A.

Proposal for upstream short-circuit protection devices

The following short-circuit data apply for the components of the infeed system for 3RA6 compact starters:

Conductor cross-section AWG	Inscriptions	Proposal for upstream short-circuit protection device
Short-circuit protection for infeed block (4-2 AWG) with screw connection		
14-2	$I_{d,\,max}$ = 19 kA, I^2t = 440 kA²s	**3RV10 41-4JA10**
Short-circuit protection for infeed block (0-2/0 AWG) with screw connection		
14-2/0	$I_{d,\,max}$ = approx. 22 kA	**3RV10 41-4MA10**
Short-circuit protection for infeed block with spring-type connection		
12	$I_{d,\,max}$ = 9.5 kA, I^2t = 85 kA²s	**3RV10 21-4DA10**
10	$I_{d,\,max}$ = 12.5 kA, I^2t = 140 kA²s	**3RV10 31-4EA10**
8	$I_{d,\,max}$ = 15 kA, I^2t = 180 kA²s	**3RV10 31-4HA10**
6-4	$I_{d,\,max}$ = 19 kA, I^2t = 440 kA²s	**3RV10 41-4JA10**
Short-circuit protection for terminal block		
16	$I_{d,\,max}$ = 7.5 kA	**5SY...** [1]
14	$I_{d,\,max}$ = 9.5 kA	
12	$I_{d,\,max}$ = 9.5 kA	
10	$I_{d,\,max}$ = 12.5 kA	

[1] To prevent the possibility of short-circuits, the cables on the terminal block must be installed so that they are short-circuit proof according to EN 60439-1 Section 7.5.5.1.2.

Selection and ordering data

	Version	Order No.	Weight approx. kg
Three-phase infeeds and expansion modules			
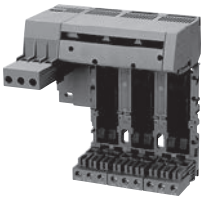 3RA68 12-8AB	***Infeeds with screw connection 4-2 AWG left***		
	Infeed with screw connection with permanently fitted **3-socket expansion module with screw or spring-type terminals on the outgoing side and integrated PE bar**	**Screw terminals**	
	Expansion module with 3 sockets for 3 direct-on-line starters or 1 direct-on-line starter and 1 reversing starter		
	• Screw terminals on outgoing side	**3RA68 12-8AB**	0.957
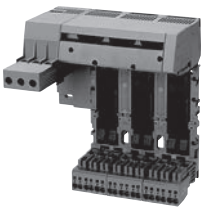 3RA68 12-8AC	• Spring-type terminals on outgoing side	**3RA68 12-8AC**	0.990
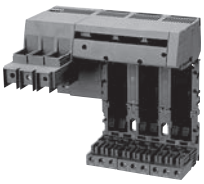 3RA68 13-8AB	***Infeeds with screw connection 0-2/0 AWG left***		
	Infeed with screw connection with permanently fitted **3-socket expansion module with screw or spring-type terminals** on the outgoing side and integrated PE bar	**Screw terminals**	
	Expansion module with 3 sockets for 3 direct-on-line starters or 1 direct-on-line starter and 1 reversing starter, suitable for UL duty according to UL 508 Type E		
	• Screw terminals on outgoing side	**3RA68 13-8AB**	1.146
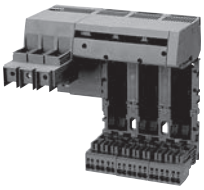 3RA68 13-8AC	• Spring-type terminals on outgoing side	**3RA68 13-8AC**	1.179
3RA68 30-5AC	***Infeeds with spring-type connection 4-2 AWG left or right***		
		Spring-type terminals	
	Up to 63 A	**3RA68 30-5AC**	0.283

Expansion modules

	Version	Order No.	Weight approx. kg
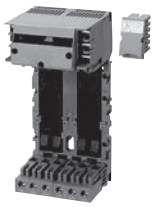 3RA68 22-0AB	***Two-socket expansion modules*** **With screw or spring-type terminals** and integrated PE bar with 2 sockets for 2 direct-on-line starters or 1 reversing starter Expansion plug and 2 connecting plates are included in the scope of supply.	**Screw terminals**	
	• Screw terminals	**3RA68 22-0AB**	0.505
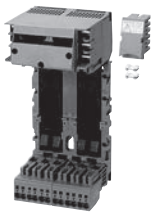 3RA68 22-0AC		**Spring-type terminals**	
	• Spring-type terminals	**3RA68 22-0AC**	0.527
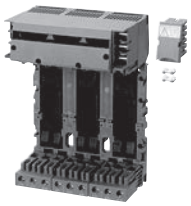 3RA68 23-0AB	***Three-socket expansion modules*** **With screw or spring-type terminals** and integrated PE bar with 3 sockets for 3 direct-on-line starters or 1 direct-on-line starter and 1 reversing starter Expansion plug and 2 connecting plates are included in the scope of supply.	**Screw terminals**	
	• Screw terminals	**3RA68 23-0AB**	0.717
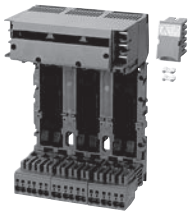 3RA68 23-0AC		**Spring-type terminals**	
	• Spring-type terminals	**3RA68 23-0AC**	0.750

Accessories

	Version	Order No.	Weight approx. kg
Accessories for 3RA6 infeed systems			
	PE infeeds 4-2 AWG		
3RA68 60-6AB	• Screw terminals	**Screw terminals** **3RA68 60-6AB**	0.060
3RA68 60-5AC	• Spring-type terminals	**Spring-type terminals** **3RA68 60-5AC**	0.070
	PE tap-offs 10-8 AWG		
3RA68 70-4AB	• Screw terminals	**Screw terminals** **3RA68 70-4AB**	0.019
3RA68 70-3AC	• Spring-type terminals	**Spring-type terminals** **3RA68 70-3AC**	0.017
	Expansion plugs		
3RA68 90-0EA	**PE expansion plugs**	**3RA68 90-0EA**	0.008
3RA68 90-1AB	**Expansion plugs** between 2 expansion modules Is included in the scope of supply of the expansion modules.	**3RA68 90-1AB**	0.029
3RA68 90-1AA	**Expansion plugs for SIRIUS 3RV19/29 infeed system** Connects infeed system for 3RA6 to 3RV29 infeed systems	**3RA68 90-1AA**	0.079

	Version	Order No.	Weight approx.
Accessories for infeed systems for 3RA6 (continued)			
3RA6890-0BA	***45 mm adapters*** For SIRIUS 3RV1.2 and 3RV2.2 motor starter protectors. Size S0 up to 25 A • Screw terminals (conductor cross-section AWG 10)	**Screw terminals** **3RA6890-0BA**	0.152
3RA6880-2AB	***Terminal covers for infeeds with screw connection*** **IP20 terminal covers for infeeds with screw connection 25/35 mm² (3RA6812-8AB/AC)** (2 units per pack)	**3RA6880-2AB**	
3RA6880-3AB	**IP20 terminal covers for infeeds with screw connection 50/70 mm² (3RA6813-8AB/AC)** (2 units per pack)	**3RA6880-3AB**	
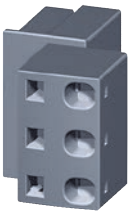 3RV2917-5D	***Terminal blocks*** For integration of single-phase, 2-phase and 3-phase external components • Spring-type terminals	**Spring-type terminals** **3RV2917-5D**	.0.050
Tools for opening spring-type terminals			
3RA2908-1A	***Screwdrivers*** For all SIRIUS devices with spring-type terminals Length approx. 200 mm, 3.0 mm x 0.5 mm, titanium gray/black, partially insulated	**Spring-type terminals** **3RA2908-1A**	.0.045
System Manual "SIRIUS Compact Starters and Accessories"			
	The system manual can be downloaded free of charge in PDF format from the Internet, see http://support.automation.siemens.com/WW/view/en/27136554/133300		

More information

Type Size Number of poles			3RA61 S0 3	3RA62	3RA64	3RA65
General technical specifications						
Device standard			IEC/EN 60947-6-2			
Mounting dimensions (WxHxD) • Screw terminals • Spring-type terminals	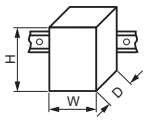	mm mm	45 x 170 x 165 45 x 191 x 165	90 x 170 x 165 90 x 191 x 165	45 x 170 x 165 45 x 191 x 165	90 x 170 x 165 90 x 191 x 165
Weight		kg	1.4	2.3 -2.4	1.3	2.3
Permissible mounting positions			No restrictions, preferably vertical or horizontal installation			
Max. rated current I_e in the respective setting range	0.1 ... 0.4 A 0.32 ... 1.25 A 1 ... 4 A 3 ... 12 A 8 ... 32 A	A A A A A	0.4 1.25 4 12 32			
Permissible ambient temperature • During operation • For installation in SIRIUS infeed system for 3RA6 • During storage • During transport	 Acc. to IEC/EN 60721-3-3 IEC/EN 60732-3-1 IEC/EN 60721-3-2	 °C °C °C °C	 -20 ... +60, with derating up to +70 -20 ... +40 -55 ... +80 -55 ... +80			
Permissible rated current of the compact starter, when several compact starters are mounted side-by-side on a vertical standard mounting rail or in the 3RA6 infeed system • For a control cabinet inside temperature of • For a control cabinet inside temperature of • For a control cabinet inside temperature of	 +40 °C +60 °C +70 °C	 % % %	 100 80 60			
Relative air humidity		%	10 ... 90			
Installation altitude		m	Up to 2000 above sea level without restriction			
Rated frequency		Hz	50/60			
Rated insulation voltage U_i (pollution degree 3)		V	690			
Rated impulse withstand voltage U_{imp}		kV	6			
Trip class (CLASS)	Acc. to IEC 60947-4-1, EN 60947-4-1		10/20			
Rated short-circuit current I_q **at AC 50/60 Hz 480 V**	Acc. to IEC 60947-4-1, EN 60947-4-1	kA	30 (up to 12 A units) 15 (8 ... 32 A unit)			
Types of coordination	Acc. to IEC 60947-6-2, EN 60947-6-2		Continuous			
Power loss $P_{v\ max}$ of all main current paths Dependent on the rated current I_e (upper setting range)	0.4 A 1.25 A 4 A 12 A 32 A	mW mW W W W	10 100 1 1.8 5.4			
Max. switching frequency	AC-41 AC-43 AC-44	1/h 1/h 1/h	750 250 15			
Drive losses Active power	 At 24 V • 0.1 ... 12 A • 8 ... 32 A At 110 ... 240 V • 0.1 ... 12 A • 8 ... 32 A	 W W W W	 2.7 2.95 3.4 3.8			
Overload function Ratio of lower to upper current mark			1:4			
Shock resistance (sine-wave pulse)			a = 60 m/s² = 6 g with 10 ms; for every 3 shocks in all axes			
Vibratory load			f = 4 ... 5.8 Hz; d =15 mm; f = 5.8 ... 500 Hz; a = 20 m/s²;10 cycles			
Protection class IP on the front	Acc. to IEC 60529		IP20			
Touch protection on the front	Acc. to IEC 60529		Finger-safe, for vertical contact from the front (screw and spring-type terminal)			
Isolating features of the compact starter	Acc. to IEC/EN 60947-3		Yes: Isolation is assured only by moving the actuator into the *OFF* position			
Main and EMERGENCY-STOP switch characteristics of the compact starter and accessories	Acc. to IEC 60204		Yes			

General data

Type Size Number of poles			3RA61 S0 3	3RA62	3RA64	3RA65
General technical specifications (continued)						
Protective separation	Acc. to IEC 60947-2					
Control circuit to auxiliary circuit						
• Horizontal standard mounting rail		V	Up to 400			
• Other mounting position		V	Up to 250			
Auxiliary circuit to auxiliary circuit						
• Horizontal standard mounting rail		V	Up to 400			
• Other mounting position		V	Up to 250			
Main circuit to auxiliary circuit						
• Any mounting position		V	Up to 400			
EMC interference immunity	Acc. to IEC/EN 60947-1		Corresponds to degree of severity 3			
Conductor-related interference	BURST acc. to IEC/EN 61000-4-4					
• In the main circuit		kV	4		4	
• In the auxiliary circuit		kV	3		2	
Conductor-related interference	SURGE acc. to IEC/EN 61000-4-5					
• In the main circuit						
- Conductor - Ground		kV	4		2	
- Conductor - Conductor		kV	2		1	
• In the auxiliary circuit						
- Conductor - Ground		kV	2		0.5[1]	
- Conductor - Conductor		kV	1		0.5[1]	
Auxiliary switches						
• Integrated						
- Position of the main contacts			1 NO + 1 NC	2 NO	1 NO + 1 NC	2 NO
- Overload/short-circuit signal			1 CO/1 NO			
• Expandable						
- Position of the main contacts			2 NO, 2 NC, 1 NO + 1 NC			
Surge suppressors			Integrated (Varistor)			
Pollution degree			3			
Depth from standard mounting rail		mm	160			
Electromagnetic operating mechanism						
Control voltage		V V	24 AC/DC 110 ... 240 AC/DC		24 DC --	
Frequency	At AC	Hz	50/60 (±5%)			
Primary operating range			0.7 ... 1.25 U_s		0.85 ... 1.2 U_s	
No-load switching frequency		1/h	3600			
Make-time		ms	max. 70		Max. 70 + IO-Link communication	
Break-time		ms	max. 120		Max. 120 + IO-Link communication	

[1] To maintain maximum interference immunity in a harsh electromagnetic environment, additional overvoltage protection should be provided in the control supply current circuit. A suitable choice is for example the Dehn Blitzductor BVT AD 24 V, Art. No. 918 402 or an equivalent protective element.
Manufacturer: DEHN+SÖHNE GmbH+Co. KG, Hans-Dehn-Straße. 1, Postfach 1640, D-92306 Neumarkt

Type		3RA61 20-.□B3., 3RA62 50-.□B3. □ = A, B, C or D Rated operational current ≤12 A				3RA61 20-.EB3., 3RA62 50-.EB3. Rated operational current 32 A			
Rated control supply voltage	**V**	**24 AC**		**24 DC**		**24 AC**		**24 DC**	
Inrush peak current	A	0.59		0.47		0.59		0.47	
Hold current	A	0.13		0.12		0.17		0.14	
Closed	W	2.8		2.9		3.5		3.1	
Operating times, typical									
• On	ms	<160		<140		<160		<140	
• Off	ms	<35		<35		<30		<30	
Type		3RA61 20-.□E3., 3RA62 50-.□P3. □ = A, B, C or D Rated operational current ≤12 A				3RA61 20-.EE3., 3RA62 50-.EE3. Rated operational current 32 A			
Rated control supply voltage	**V**	**110 AC**	**240 AC**	**110 DC**	**240 DC**	**110 AC**	**240 AC**	**110 DC**	**240 DC**
Inrush peak current	A	0.24	0.40	0.17	0.29	0.24	0.40	0.17	0.29
Hold current	A	0.06	0.08	0.03	0.02	0.06	0.07	0.04	0.03
Closed	W	3.8	6	3.1	5.1	3.7	5.2	3.4	5.8
Operating times, typical									
• On	ms	<160	<140	<150	<140	<160	<140	<150	<140
• Off	ms	<50	<80	<50	<70	<40	<60	<40	<60
Type		3RA64 00-.□B4., 3RA65 00-.□B4. □ = A, B, C or D Rated operational current ≤12A				3RA64 00-.EB4., 3RA65 00-.EB4. Rated operational current 32 A			
Rated control supply voltage	**V**	**24 DC**				**24 DC**			
Inrush peak current	A	0.39				0.53			
Hold current	A	0.13				0.15			
Closed	W	2.9				3.4			
Operating times, typical[1)]									
• On	ms	<140				<140			
• Off	ms	<35				<30			

General data

Type Size Number of poles			3RA61 S0 3	3RA62	3RA64	3RA65
Electromagnetic operating mechanism (continued)						
Switching capacity at 480 V		kA	30 (up to 12 A) 15 (8 ... 32 A)			
Switching capacity at 600 V		kA	10 (up to 12 A) 5 (8 ... 32 A)			
Line protection	At 10 kA At 50 kA	AWG AWG	14 12			
Shock resistance • Breaker mechanism OFF • Breaker mechanism ON		 *g* *g*	 25 15			
Normal switching duty						
Making capacity			12 x I_n			
Breaking capacity			10 x I_n			
Switching capacity dependent on rated current	Up to 12 A Up to 32 A	HP HP	7 1/2 20			
Endurance in operating cycles • Electrical endurance	 At I_e = 0.9 x I_n and 400 V		 3 ... 10 000 000	 2 x 3 ... 10 000 000	 3 000 000	 2 x 1 500 000
Control circuit						
Rated operational voltage • External auxiliary switch block • Internal auxiliary switch • Short-circuit signaling switch • Overload signaling switch		 V V V V	 400/690 400/690 400 400			
Switching capacity • External auxiliary switch block	**AC-15**					
	• At U_e = 230 V	A	6			
	• At U_e = 400 V	A	3			
	• At U_e = 289/500 V	A	2			
	• At U_e = 400/690 V	A	1			
	DC-13					
	• At U_e = 24 V	A	6			
	• At U_e = 60 V	A	0.9			
	• At U_e = 125 V	A	0.55			
	• At U_e = 250 V	A	0.27			
• Internal auxiliary switch	**AC-15**					
	• At U_e = 230 V	A	6			
	• At U_e = 400 V	A	3			
	• At U_e = 289/500 V	A	2			
	• At U_e = 400/690 V	A	1			
	DC-13					
	• At U_e = 24 V	A	10			
	• At U_e = 60 V	A	2			
	• At U_e = 125 V	A	1			
	• At U_e = 250 V	A	0.27			
	• At U_e = 480 V	A	0.1			
• Signaling switch	**AC-15**					
	• At U_e = 230 V	A	3			
	• At U_e = 400 V	A	1			
	DC-13					
	• At U_e = 24 V	A	2			
	• At U_e = 250 V	A	0.11			

Type Size Number of poles			3RA61 S0 3	3RA62	3RA64	3RA65
External auxiliary switch block, internal auxiliary switch						
Endurance in operating cycles						
• Mechanical endurance			10 000 000		3 000 000	
• Electrical endurance	**AC-15, 230 V**					
	• At 6 A		200 000			
	• At 3 A		500 000			
	• At 1 A		2 000 000			
	• At 0.3 A		10 000 000			
	DC-13, 24 V					
	• At 6 A		300 00			
	• At 3 A		100 000			
	• At 0.5 A		2 000 000			
	• At 0.2 A		10 000 000			
	DC-13, 110 V					
	• At 1 A		40 000			
	• At 0.55 A		100 000			
	• At 0.3 A		300 000			
	• At 0.1 A		2 000 000			
	• At 0.04 A		10 000 000			
	DC-13, 220 V					
	• At 0.3 A		110 000			
	• At 0.1 A		650 000			
	• At 0.05 A		2 000 000			
	• At 0.018 A		10 000 000			
Contact stability	At 17 V and 5 mA	Operating cycles	1 incorrect switching operation per 100 000 000			
Short-circuit protection						
• Short-circuit current $I_K \leq 1.1$ kA	Fuse links operational class gG - NEOZED Type 5SE - DIAZED Type 5SB - LV HRC Type 3NA	A	10			
• Short-circuit current $I_K < 400$ A	Miniature circuit breaker up to 230 V with C characteristic	A	10			
Signaling switches						
Endurance in operating cycles						
• Mechanical endurance			20000			
• Electrical endurance AC-15	At 230 V and 3 A		6050			
Contact stability	At 17 V and 5 mA	Operating cycles	1 incorrect switching operation per 100 000 000			
Short-circuit protection						
• Short-circuit current $I_K \leq 1.1$ kA	Fuse links operational class gG - NEOZED Type 5SE - DIAZED Type 5SB - LV HRC Type 3NA	A	6			
• Short-circuit current $I_K < 400$ A	Miniature circuit breaker up to 230 V with C characteristic	A	6			
Overload (short-circuit current $I_K \leq 1.1$ kA)	Fuse links operational class gG - NEOZED Type 5SE - DIAZED Type 5SB - LV HRC Type 3NA	A	4			

Technical data

Connection type		Screw connection		Spring-type connection	
Max. rated current I_{max}		**12 A**	**32 A**	**12 A**	**32 A**
Conductor cross-sections of main circuit terminals					
Tools		Posidrive size 2		(3.5 x 0.5) mm, 8WA2 803	
Prescribed tightening torque	NM	2 ... 2.5		--	
Minimum/maximum conductor cross-sections					
• Solid	mm² mm² mm²	2 x (1.5 ... 2.5) 2 x (2.5 ... 6) Max. 1 x 10	2 x (2.5 ... 6) Max. 1 x 10	2 x (1.5 ... 6) Max. 1 x 10	2 x (2.5 ... 6) Max. 1 x 10
• Finely stranded without ferrule	mm²	--	--	2 x (1.5 ... 6)	2 x (2.5 ... 6)
• Finely stranded with ferrule	mm² mm²	2 x (1.5 ... 2.5) 2 x (2.5 ... 6)	2 x (2.5 ... 6)	2 x (1.5 ... 6)	2 x (2.5 ... 6)
• AWG cables	AWG AWG AWG	2 x (16 ...14) 2 x (14 ...10) 1 x 8	2 x (14 ...10) 1 x 8	2 x (16 ...10) 1 x 8	2 x (14 ...10) 1 x 8

Connection type		Screw connection	Spring-type connection
Conductor cross-sections of control circuit terminals			
Tools		Posidrive size 2	(3.0 x 0.5) mm, DIN ISO 2380-1A
Prescribed tightening torque	NM	0.8 ... 1.2	--
Minimum/maximum conductor cross-sections			
• Solid	mm² mm²	1 x (0.5 ... 4) 2 x (0.5 ... 2.5)	2 x (0.25 ... 1.5)
• Finely stranded without ferrule	mm²	--	2 x (0.25 ... 1.5)
• Finely stranded with ferrule	mm² mm²	1 x (0.5 ... 2.5) 2 x (0.5 ... 1.5)	2 x (0.25 ... 1.5)
• AWG cables	AWG	2 x (20 ... 14)	2 x (24 ... 16)
Conductor cross-sections of the auxiliary switch for compact starters			
Order No.		**3RA69 1.-1A**	**3RA69 1.-2A**
Tools		Posidrive size 2	(2.5 x 0.4) mm, 8WA2 807
Prescribed tightening torque	NM	0.8 ... 1.2	--
Conductor cross-sections			
• Solid	mm² mm² mm²	2 x (0.5 ...1.5) 2 x (0.75 ... 2.5) 2 x (1 ... 4)	2 x (0.25 ... 2.5)
• Finely stranded without ferrule	mm²	--	2 x (0.25 ... 2.5)
• Finely stranded with ferrule	mm² mm²	2 x (0.5 ... 1.5) 2 x (0.75 ... 2.5)	2 x (0.25 ... 1.5)
• AWG cables	AWG AWG AWG	2 x (20 ... 16) 2 x (18 ... 14) 1 x 12	2 x (24 ... 14)

Technical data

Order No.			3RA6970-3A, 3RA6970-3B, 3RA6970-3C, 3RA6970-3D, 3RA6970-3E
General data of the AS-i add-on module			
Permissible ambient temperature			
• Storage	Acc. to IEC/EN 60721-3-1	°C	-25 ... +70
• Transport	Acc. to IEC/EN 60721-3-2	°C	-25 ... +70
Degree of protection	Acc. to IEC/EN 60947-1		IP20
EMC interference immunity	Acc. to EN 50295		
Conductor-related interference	BURST acc. to IEC/EN 61000-4-4	kV	1/2
Electrostatic discharge	Acc. to IEC/EN 61000-4-2	kV	6/8
Field-related interference	Acc. to IEC/EN 61000-4-3	V/m	10 (80 MHz ... 2.7 GHz)
Maximum pick-up current		mA	400
Maximum hold current		mA	200
Power consumption, max.		mA	30
IO code			7
ID code			A
ID2 code			E

Order No.		3RA6970-3B, 3RA6970-3C, 3RA6970-3D, 3RA6970-3E
Connection type		⊕ **Screw connection**
Conductor cross-sections of the AS-i add-on module		
Tools		Posidrive size 1
Prescribed tightening torque	NM	0.5 ... 0.6
Conductor cross-sections		
• Solid	mm^2	1 x (0.5 ... 2.5)
	mm^2	2 x (0.5 ... 1.0)
• Finely stranded with ferrule	mm^2	1 x (0.5 ... 2.5)
	mm^2	2 x (0.5 ... 1.0)
• AWG cables	AWG	1 x (20 ... 12)

Technical data

Type			3RA6.	
General data				
Max. rated operational current				
• Infeed with screw connection 0-2/0 AWG		A	100	
• Infeed with screw connection 4-2 AWG		A	63	
• Infeed with spring-type connection 10-3 AWG		A	63	
• Expansion plug		A	63	
Permissible ambient temperature				
• During operation		°C	-20 ... +60 (over +40 current reduction is required)	
- Permissible rated current at control cabinet inside temperature: +40 °C		%	100	
+60 °C		%	80	
• During storage/transport		°C	-55 ... +80	
Relative air humidity		%	10 ... 90	
Installation altitude		m	Up to 2000 above sea level without restriction	
Rated operational voltage U_e		V	690 AC	
Rated frequency		Hz	50/60	
Shock resistance			a = 60 m/s² = 6g with 10 ms; for every 3 shocks in all axes	
Vibratory load			f =1 ... 6 Hz; d =15 mm 10 cycles f =150 Hz; a = 2 g	
Degree of protection	Acc. to IEC 60947-1		IP20 (IP 00 terminal compartment)	
Touch protection	Acc. to EN 50274		Finger-safe	
Degree of pollution			3	
Short-circuit protection for **infeed with screw connection 4-2 AWG and infeed with screw connection 0-2/0 AWG**				Recommendation for upstream short-circuit protection device 3RV1041-4JA10 3RV1041-4MA10
	$I_{d,max}$	kA	< 21	
	I^2t	kA²s	530	LV HRC gL/gG 3NA3, 315 A
Short-circuit protection for infeed with spring-type connection				Recommendation for upstream short-circuit protection device
• Conductor cross-section 12 AWG	$I_{d,max}$	kA	< 9.5	3RV2021-4DA10
	I^2t	kA²s	85	
• Conductor cross-section 10 AWG	$I_{d,max}$	kA	< 12.5	3RV1031-4EA10
	I^2t	kA²s	140	
• Conductor cross-section 8 AWG	$I_{d,max}$	kA	< 15	3RV1031-4HA10
	I^2t	kA²s	180	
• Conductor cross-section 6-4 AWG	$I_{d,max}$	kA	< 19	3RV1041-4JA10
	I^2t	kA²s	440	
Short-circuit protection for terminal block				Recommendation for upstream short-circuit protection device 5SY... 1)
• Conductor cross-section 16 AWG	$I_{d,max}$	kA	7.5	
• Conductor cross-section 14 AWG	$I_{d,max}$	kA	9.5	
• Conductor cross-section 12 AWG	$I_{d,max}$	kA	9.5	
• Conductor cross-section 10 AWG	$I_{d,max}$	kA	12.5	

1) To prevent the possibility of short-circuits, the cables on the terminal block must be installed so that they are short-circuit resistant according to EN 60439-1 Section 7.5.5.1.2.

Type		3RV29.
Connection type		**Spring-type connection**
Conductor cross-sections of terminal block		
Order No.		**3RV29 17-5D**
Conductor cross-sections		
• Solid	mm²	1.5 ... 6
• Finely stranded with ferrule	mm²	1.5 ... 4
• Finely stranded without ferrule	mm²	1.5 ... 6
• AWG cables, solid or stranded	AWG	15 ... 10

Technical data

Type		**3RA6.**		
Connection type		Screw connection		
Conductor cross-sections of infeed with screw connection 16-2 AWG (L1, L2, L3)[1] and PE infeed 2 AWG[2]				
Order No.		**3RA68 12-8AB, 3RA68 12-8AC, 3RA68 60-6AB**		
Tools		Posidrive size 2		
Specified tightening torque	NM	3 ... 4.5		
		NSB00479	NSB00480	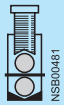 NSB00481
Conductor cross-sections				
• Solid	mm^2	2.6 ... 16	2.6 ... 16	max. 2 x 16
• Stranded	mm^2	2.5 ... 35	2.5 ... 35	max. 2 x 25
• Finely stranded with ferrule	mm^2	2.5 ... 25	2.5 ... 25	max. 2 x 16
• Finely stranded without ferrule	mm^2	2.5 ... 25	2.5 ... 25	max. 2 x 16
• AWG cables	AWG	12 ... 2	12 ... 2	max. 2 x (16 ... 2)
Connection type		Screw connection		
Conductor cross-sections of infeed with screw connection 10-2/0 AWG (L1, L2, L3)[1]				
Order No.		**3RA68 13-8AB, 3RA68 13-8AC**		
Tools	SW	4		
Specified tightening torque	NM	6 ... 8		
		NSB00479	NSB00480	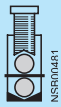 NSB00481
Conductor cross-sections				
• Solid	mm^2	2.5 ... 16	2.5 ... 16	max. 2 x 16
• Stranded	mm^2	4 ... 70	10 ... 70	max. 2 x 50
• Finely stranded with ferrule	mm^2	2.5 ... 35	2.5 ... 50	max. 2 x 35
• Finely stranded without ferrule	mm^2	4 ... 50	10 ... 50	max. 2 x 35
• AWG cables	AWG	10 ... 2/0	10 ... 2/0	max. 2 x (10 ... 1/0)
Connection type		Spring-type connection		
Conductor cross-sections of infeed with spring-type connection 10-3 AWG (L1, L2, L3)[1] and PE infeed 3 AWG				
Order No.		**3RA68 30-5AC, 3RA68 60-5AC**		
Tools	8WA2 806 mm	5.5 x 0.8		
Conductor cross-sections				
• Solid	mm^2	4 ... 16		
• Stranded	mm^2	4 ... 35		
• Finely stranded with ferrule	mm^2	4 ... 25		
• Finely stranded without ferrule	mm^2	6 ... 25		
• AWG cables	AWG	10 ... 3		
Connection type		Screw connection		Spring-type connection
Conductor cross-sections of infeed with screw connection 4-2 AWG (T1, T2, T3)[2], infeed with screw connection 0-2/0 AWG (T1, T2, T3)[2] 2-socket and 3-socket expansion modules (T1, T2, T3)[2] and PE tap-off 10-8 AWG				
Order No.		**3RA68 12-8AB, 3RA68 13-8AB, 3RA68 22-0AB, 3RA68 23-0AB, 3RA68 70-4AB**		**3RA68 12-8AC, 3RA68 13-8AC, 3RA68 22-0AC, 3RA68 23-0AC, 3RA68 70-3AC**
Tools		Posidrive size 2		(3.5 x 0.5) mm, 8WA2 803
Specified tightening torque	NM	2 ... 2.5		--
Maximum rated current	A	**12**	**32**	**12**	**32**
Conductor cross-sections					
• Solid	mm^2	2 x (1 ... 2.5)	2 x (2.5 ... 6)	2 x (1.5 ... 6)	2 x (2.5 ... 6)
	mm^2	2 x (2.5 ... 6)			
	mm^2	max. 1 x 10	max. 1 x 10	max. 1 x 10	max. 1 x 10
• Finely stranded with ferrule	mm^2	--	--	2 x (1.5 ... 6)	2 x (2.5 ... 6)
• Finely stranded without ferrule	mm^2	2 x (1 ... 2.5)	2 x (2.5 ... 6)	2 x (1.5 ... 6)	2 x (2.5 ... 6)
	mm^2	2 x (2.5 ... 6)			
• AWG cables	AWG	2 x (16 ... 14)	2 x (14 ... 10)	2 x (16 ... 10)	2 x (14 ... 10)
	AWG	2 x (14 ... 10)			
	AWG	1 x 8	1 x 8	1 x 8	1 x 8

[1] L1, L2, L3 main conductors on input side.

[2] T1, T2, T3 main conductors on output side.

Dimensional drawings

Direct-on-line starters and reversing starters

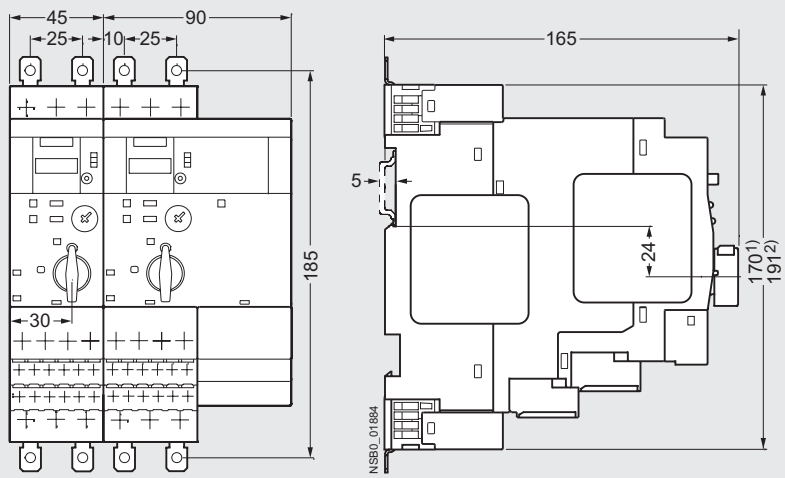

1) Screw connection
2) Spring-loaded connection

Schematics

3RA61 direct-on-line starters

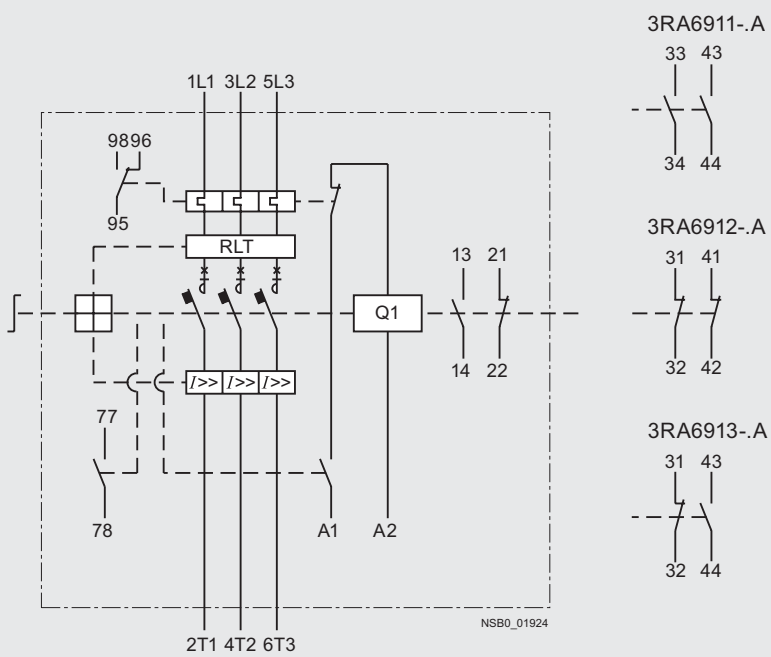

Schematic for 3RA61 direct-on-line starters (main circuit)

Dimensional drawings

3RA62 reversing starters

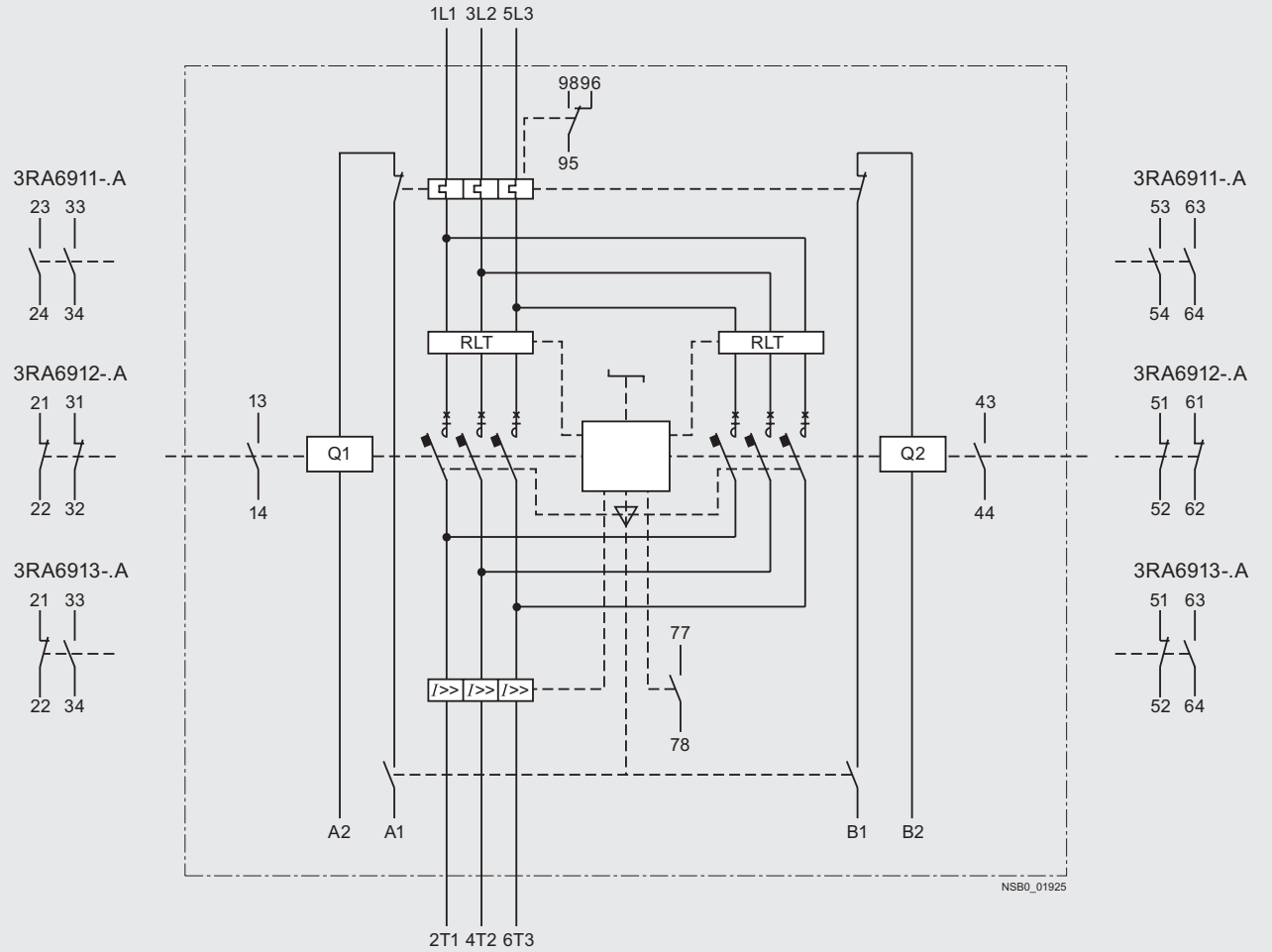

Schematic for 3RA62 reversing starters (main circuit)

Dimensional drawings

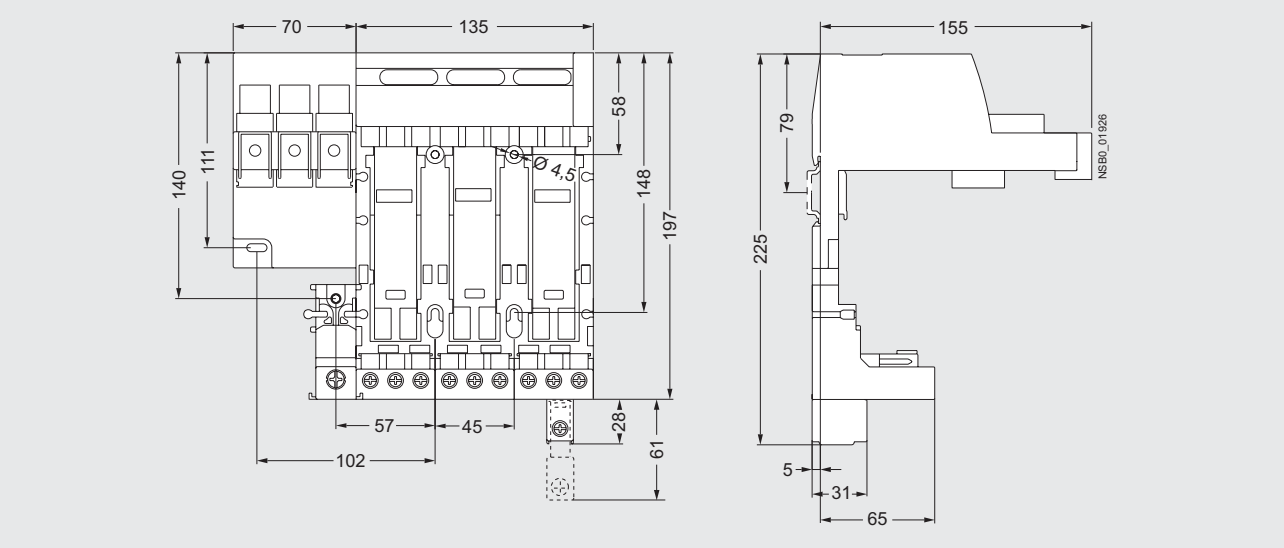

Infeed with screw connection 0-2/0 AWG on left with fixed 3-socket expansion module with outgoing screw terminals

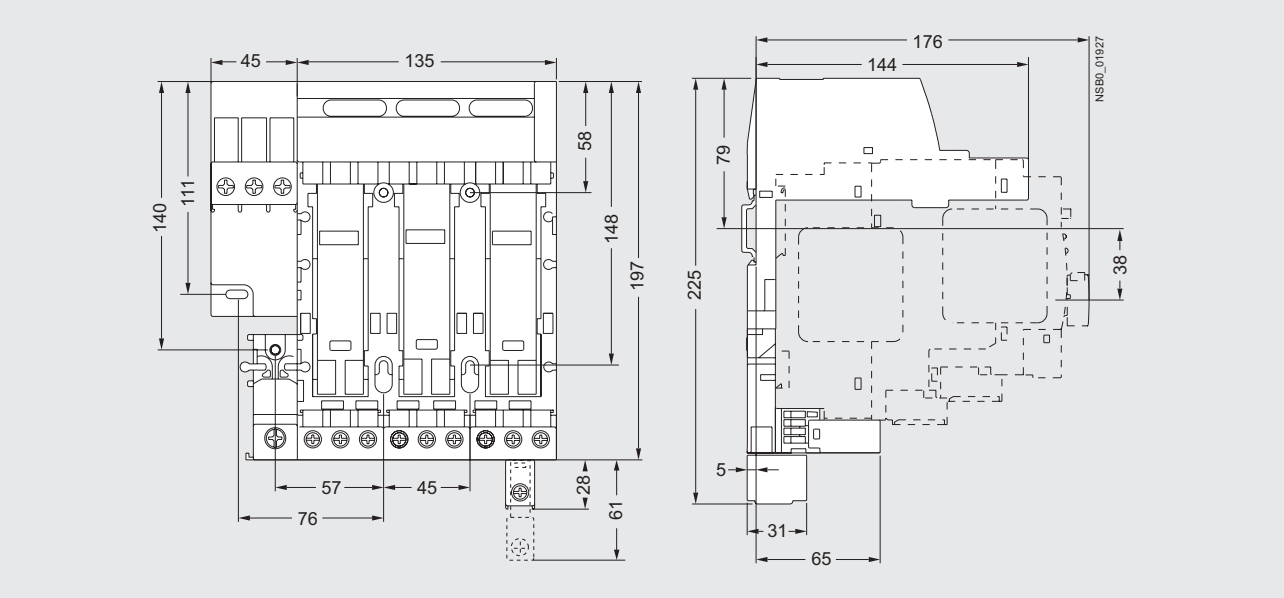

Infeed with screw connection 4-2 AWG on left with fixed 3-socket expansion module with outgoing screw terminals

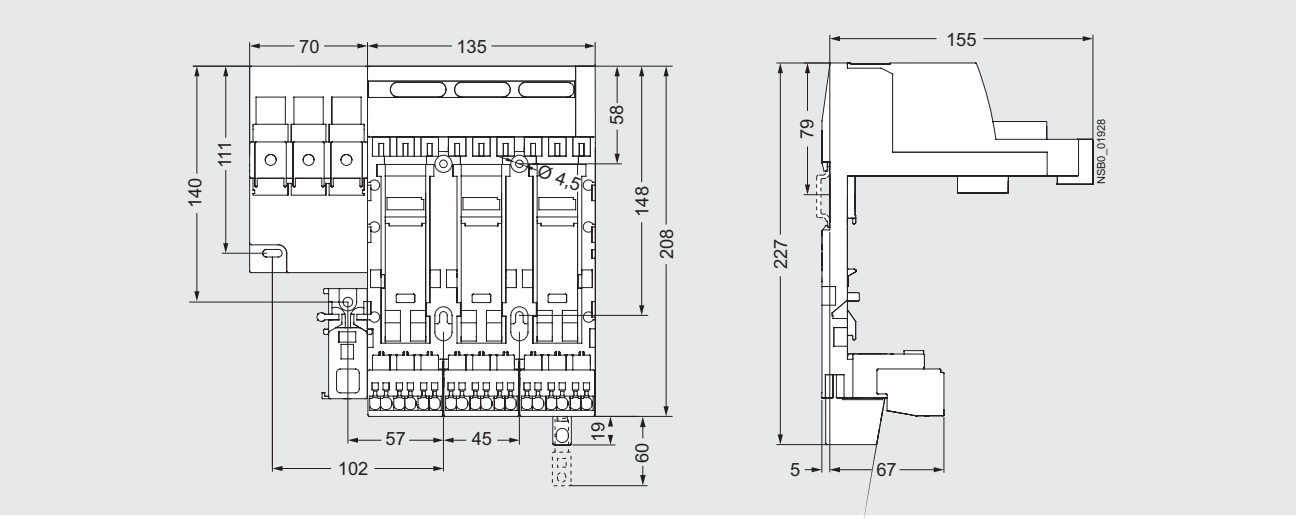

Infeed with screw connection 0-2/0 AWG on left with fixed 3-socket expansion module with outgoing spring-type terminals

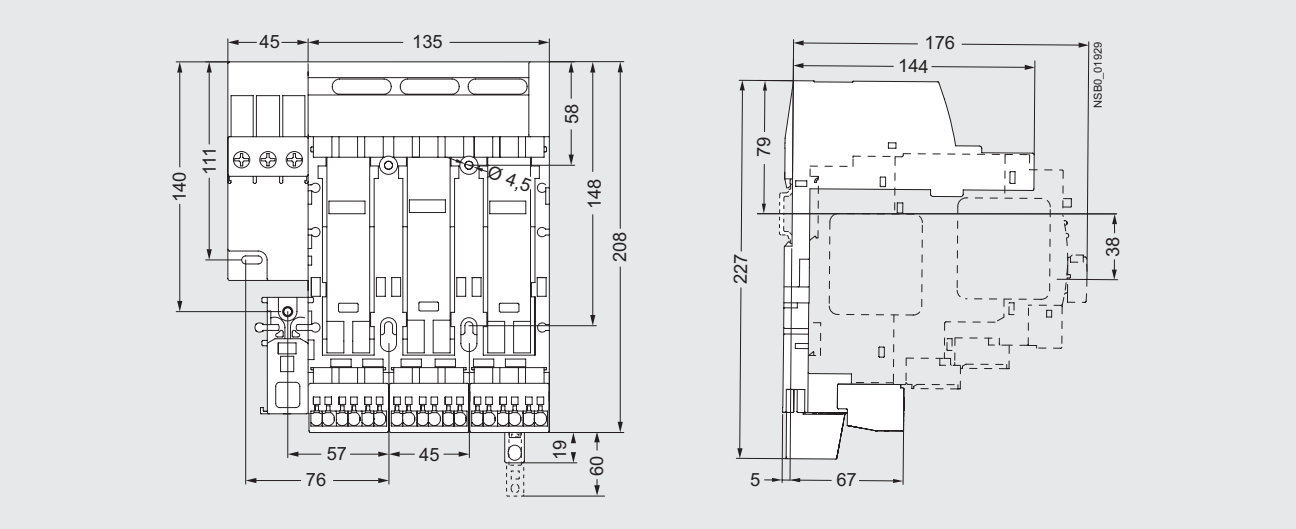

Infeed with screw connection 4-2 AWG on left with fixed 3-socket expansion module with outgoing spring-type terminals

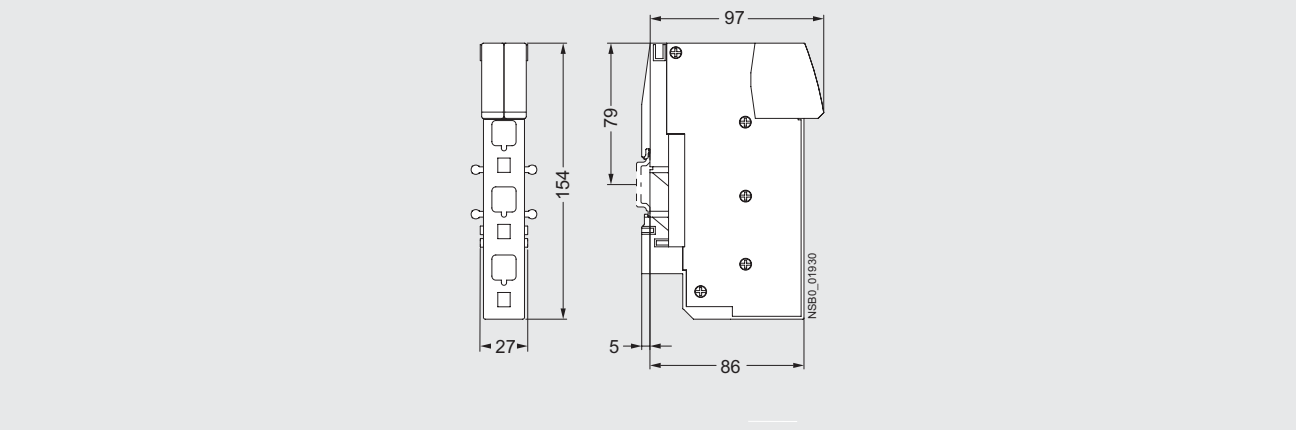

Infeed with spring-type terminals

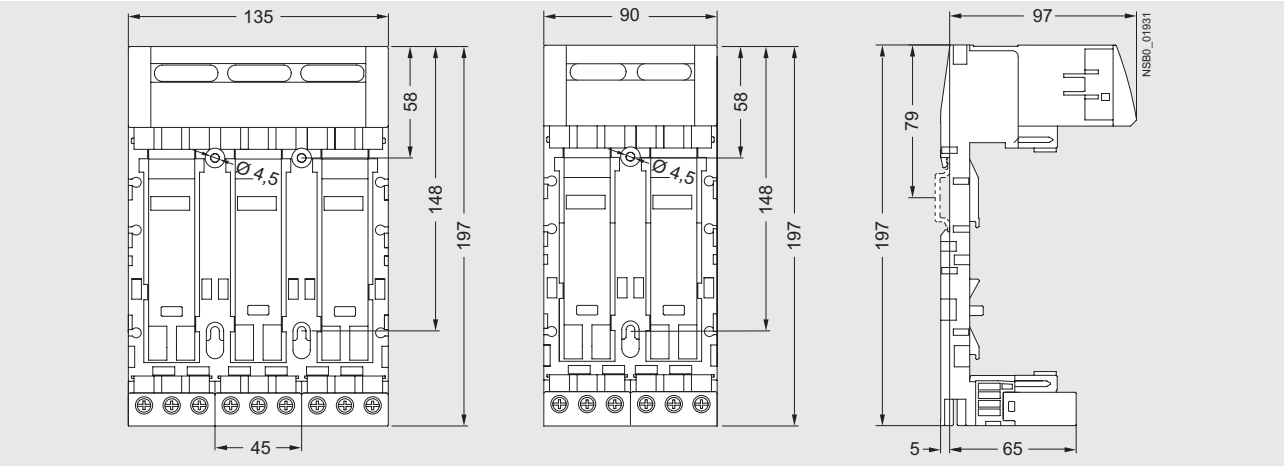

3-socket expansion module and 2-socket expansion module with outgoing screw terminals

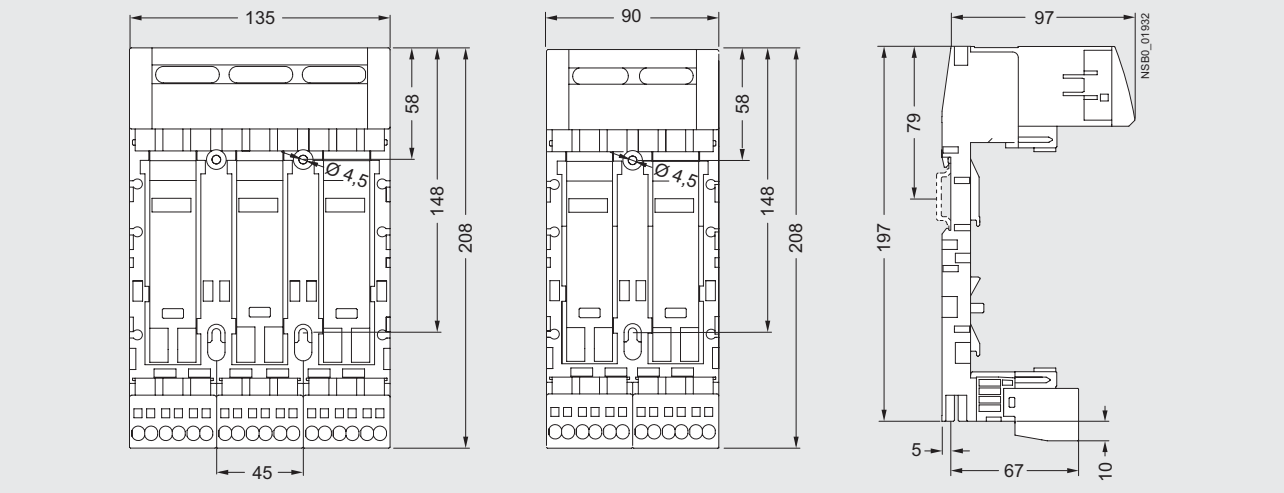

3-socket expansion module and 2-socket expansion module with outgoing spring-type terminals

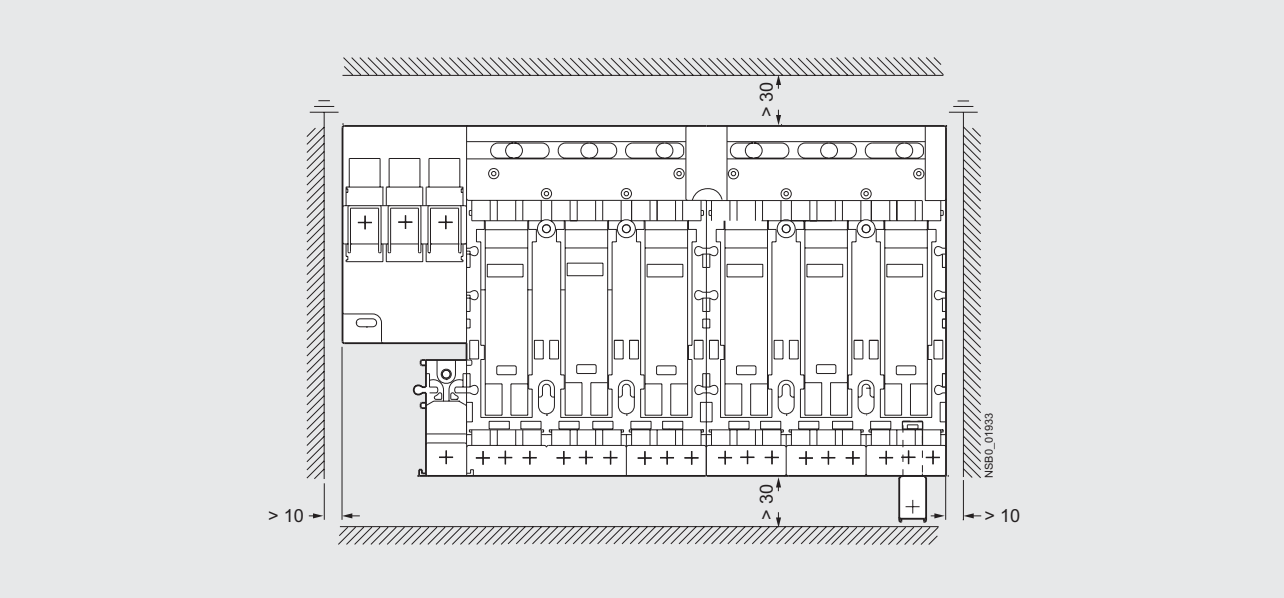

Minimum clearances to adjacent components when using infeed system for 3RA6

Selection and ordering data

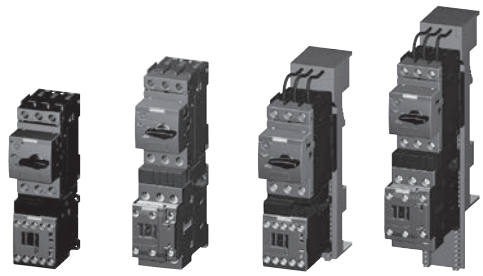

3RA21 10 3RA21 20 3RA21 10 3RA21 20

Direct-on-line starting

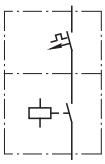

Rated control supply voltage 50/60 Hz 110/120 V AC
With screw connections

- The motor starter protector and contactor are mechanically and electrically connected by means of the link module.
- Auxiliary switches[1] on the motor starter protector and the contactor can be easily fitted due to the modular system.
- Integrated auxiliary switches:
  - Contactor size S00: 1 NO;
  - Contactor size S0: 1 NO + 1 NC

Combination Starter, UL508 Type F
All size S00 and S0 devices can be applied as Combination Starters with the addition of either of these line side connectors: 3RV29 28-1H, 3RV29 25-5EB or 3RV29 28-1K.

Size	UL Data: Single-phase HP ratings 115 V	230 V	Three-phase[2] HP ratings 200 V	230 V	460 V	575 V	SCCR at 480 V kA	FLA setting range inverse-time delayed overload release A	Consisting of the following single devices: Motor starter protector	+ Contactor	+ Link module + Busbar adapter[3]	Assembled starter Screw terminals Order No.	Weight approx. kg
Selection depends on motor full load amps													
									3RV20	**3RT20**	**3RA**		
S00	--	--	--	--	--	--	65	0.11…0.16	11-0AA10	15-1AK61	1921-1DA00 + 8US1251-5DS10	**3RA21 1□-0A□15-1AK6**	0.575
	--	--	--	--	--	--	65	0.14…0.2	11-0BA10			**3RA21 1□-0B□15-1AK6**	0.575
	--	--	--	--	--	--	65	0.18…0.25	11-0CA10			**3RA21 1□-0C□15-1AK6**	0.575
	--	--	--	--	--	--	65	0.22…0.32	11-0DA10			**3RA21 1□-0D□15-1AK6**	0.575
	--	--	--	--	--	--	65	0.28…0.4	11-0EA10			**3RA21 1□-0E□15-1AK6**	0.575
	--	--	--	--	--	--	65	0.35…0.5	11-0FA10			**3RA21 1□-0F□15-1AK6**	0.575
	--	--	--	--	--	--	65	0.45…0.63	11-0GA10			**3RA21 1□-0G□15-1AK6**	0.575
	--	--	--	--	--	--	65	0.55…0.8	11-0HA10			**3RA21 1□-0H□15-1AK6**	0.575
	--	--	--	--	--	1/2	65	0.7… 1	11-0JA10			**3RA21 1□-0J□15-1AK6**	0.575
	--	--	--	--	1/2	1/2	65	0.9… 1.25	11-0KA10			**3RA21 1□-0K□15-1AK6**	0.575
	--	1/10	--	--	3/4	3/4	65	1.1… 1.6	11-1AA10			**3RA21 1□-1A□15-1AK6**	0.575
	--	1/8	--	--	3/4	1	65	1.4… 2	11-1BA10			**3RA21 1□-1B□15-1AK6**	0.575
	--	1/6	1/2	1/2	1	1 1/2	65	1.8… 2.5	11-1CA10			**3RA21 1□-1C□15-1AK6**	0.575
	1/10	1/4	1/2	3/4	1 1/2	2	65	2.2… 3.2	11-1DA10			**3RA21 1□-1D□15-1AK6**	0.575
	1/8	1/3	3/4	3/4	2	3	65	2.8… 4	11-1EA10			**3RA21 1□-1E□15-1AK6**	0.575
	1/6	1/2	1	1	3	3	65	3.5… 5	11-1FA10			**3RA21 1□-1F□15-1AK6**	0.575
	1/4	1/2	1	1 1/2	3	5	65	4.5… 6.3	11-1GA10			**3RA21 1□-1G□15-1AK6**	0.575
	1/3	1	2	2	5	5	65	5.5… 8	11-1HA10	16-1AK61		**3RA21 1□-1H□16-1AK6**	0.575
	1/2	1 1/2	2	3	5	7 1/2	65	7… 10	11-1JA10			**3RA21 1□-1J□16-1AK6**	0.575
	1/2	2	3	3	7 1/2	10	65	9… 12	11-1KA10	17-1AK61		**3RA21 1□-1K□17-1AK6**	0.575
	1	2	3	5	10	--	65	11… 16	11-4AA10	18-1AK61		**3RA21 1□-4A□18-1AK6**	0.575
S0	1/6	1/2	1	1	3	3	65	3.5… 5	11-1FA10	24-1AK60	2921-1AA00 + 8US1251-5NT10	**3RA21 2□-1F□24-0AK6**	0.761
	1/4	1/2	1	1 1/2	3	5	65	4.5… 6.3	11-1GA10			**3RA21 2□-1G□24-0AK6**	0.761
	1/3	1	2	2	5	5	65	5.5… 8	11-1HA10			**3RA21 2□-1H□24-0AK6**	0.761
	1/2	1 1/2	2	3	5	7 1/2	65	7… 10	11-1JA10			**3RA21 2□-1J□24-0AK6**	0.761
	1/2	2	3	3	7 1/2	10	65	9… 12.5	11-1KA10			**3RA21 2□-1K□24-0AK6**	0.761
	1	2	3	5	10	--	65	11… 16	21-4AA10	26-1AK60		**3RA21 2□-4A□26-0AK6**	0.761
	1 1/2	3	5	5	10	--	65	14… 20	21-4BA10			**3RA21 2□-4B□26-0AK6**	0.761
	1 1/2	3	5	7 1/2	15	--	50	17… 22	21-4CA10	27-1AK60		**3RA21 2□-4C□27-0AK6**	0.761
	2	3	5	7 1/2	15	--	50	20… 25	21-4DA10			**3RA21 2□-4D□27-0AK6**	0.761
	2	5	7 1/2	10	20	--	50	27… 32	21-4EA10			**3RA21 2□-4E□27-0AK6**	0.761

Order No. supplement for:		
• Standard DIN rail or screw mounting with no additional auxiliaries	**0**	**A**
• Standard DIN rail or screw mounting with 1 SPDT NO/NC MSP auxiliary (S00 frame contactor has 1NO auxiliary and S0 frame contactor has 1NO/1NC auxiliary)	**5**	**A**
• With Fast Bus adaptor and no additional auxiliaries	**0**	**D**
• With Fast Bus adaptor and 1 SPDT NO/NC MSP auxiliary (S00 frame contactor has 1NO auxiliary and S0 frame contactor has 1NO/1NC auxiliary)	**5**	**D**

1) For auxiliary switches see Accessories page 4/43.

2) Selection depends on the motor full load amps. HP ratings for reference only.

3) Used only for mounting starter on 8US Fast Bus busbar systems.

Selection and ordering data

Direct-on-line starting

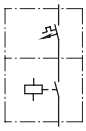

For 35 mm standard mounting rail or screw mounting

- The motor starter protector and contactor are mechanically and electrically connected by means of the link module.
- Auxiliary switches[1]) on the motor starter protector and the contactor can be easily fitted due to the modular system.
- Integrated auxiliary switches:
  - Contactor size S2: 1 NO & 1 NC
  - Contactor size S3: 1 NO & 1 NC

Combination Starter, UL508 Type F

- Size S2 devices can be applied as Combination Starters. For versions of 50A or higher, the addition of a 3RV2938-1K line side phase barrier is required.
- Size S3 devices can be applied as Combination Starters with the addition of a 3RT2946-4GA07 line side terminal kit

Single-Phase HP Ratings 115V	Single-Phase HP Ratings 230V	Three-Phase[2]) HP ratings 200V	Three-Phase[2]) HP ratings 230V	Three-Phase[2]) HP ratings 460V	Three-Phase[2]) HP ratings 575V	SCCR at 480Y/277V kA	FLA setting range Inverse-time delayed overload release A	Starter Order No.	Size	Consisting of the following individual devices: Motor starter protector	+ Contactor	+ Link module + Adapter for standard mounting rail[3])
110VAC 50Hz / 120VAC 60 Hz												
3	7.5	10	15	30	40	65	22... 32	**3RA21 3□-4EA35-□AK6**	**S2**	3RV20 31-4EA10	3RT2035-1AK60	3RA2931-1AA00 + 3RA2932-1AA00 (must be ordered separately)
3	10	15	15	40	50	65	28... 36	**3RA21 3□-4PA36-□AK6**		3RV20 31-4PA10	3RT2036-1AK60	
3	10	15	15	40	50	65	32... 40	**3RA21 3□-4UA36-□AK6**		3RV20 31-4UA10		
3	10	15	15	40	50	65	35... 45	**3RA21 3□-4VA36-□AK6**		3RV20 31-4VA10		
5	10	20	20	50	50	65	42... 52	**3RA21 3□-4WA37-□AK6**		3RV20 31-4WA10	3RT2037-1AK60	
5	15	20	25	50	60	20	49... 59	**3RA21 3□-4XA38-□AK6**		3RV20 31-4XA10	3RT2038-1AK60	
5	15	20	25	50	60	20	54... 65	**3RA21 3□-4JA38-□AK6**		3RV20 31-4JA10		
7.5	15	25	30	60	60	65	28... 40	**3RA21 4□-4FB45-□AK6**	**S3**	3RV20 41-4FA10	3RT2045-1AK60	3RA1941-1AA00 + 3RA2942-1AA00
7.5	15	25	30	60	60	65	36... 50	**3RA21 4□-4HB45-□AK6**		3RV20 41-4HA10		
7.5	15	25	30	60	60	65	45... 63	**3RA21 4□-4JB45-□AK6**		3RV20 41-4JA10		
10	20	30	30	75	75	65	57... 75	**3RA21 4□-4KB46-□AK6**		3RV20 41-4KA10	3RT2046-1AK60	
10	20	30	30	75	75	65	65... 84	**3RA21 4□-4RB46-□AK6**		3RV20 41-4RA10		
10	20	30	30	75	–	65	75... 93	**3RA21 4□-4YB46-□AK6**		3RV20 41-4YA10		
10	20	30	40	75	–	65	80...100	**3RA21 4□-4MB47-□AK6**		3RV20 41-4MA10	3RT2047-1AK60	
24V UC												
3	7.5	10	15	30	40	65	22... 32	**3RA21 3□-4EA35-□NB3**	**S2**	3RV20 31-4EA10	3RT2035-1NB30	3RA2931-1AA00 + 3RA2932-1AA00 (must be ordered separately)
3	10	15	15	40	50	65	28... 36	**3RA21 3□-4PA36-□NB3**		3RV20 31-4PA10	3RT2036-1NB30	
3	10	15	15	40	50	65	32... 40	**3RA21 3□-4UA36-□NB3**		3RV20 31-4UA10		
3	10	15	15	40	50	65	35... 45	**3RA21 3□-4VA36-□NB3**		3RV20 31-4VA10		
5	10	20	20	50	50	65	42... 52	**3RA21 3□-4WA37-□NB3**		3RV20 31-4WA10	3RT2037-1NB30	
5	15	20	25	50	60	20	49... 59	**3RA21 3□-4XA38-□NB3**		3RV20 31-4XA10	3RT2038-1NB30	
5	15	20	25	50	60	20	54... 65	**3RA21 3□-4JA38-□NB3**		3RV20 31-4JA10		
7.5	15	25	30	60	60	65	28... 40	**3RA21 4□-4FB45-□NB3**	**S3**	3RV20 41-4FA10	3RT2045-1NB30	3RA1941-1BA00 + 3RA2942-1AA00
7.5	15	25	30	60	60	65	36... 50	**3RA21 4□-4HB45-□NB3**		3RV20 41-4HA10		
7.5	15	25	30	60	60	65	45... 63	**3RA21 4□-4JB45-□NB3**		3RV20 41-4JA10		
10	20	30	30	75	75	65	57... 75	**3RA21 4□-4KB46-□NB3**		3RV20 41-4KA10	3RT2046-1NB30	
10	20	30	30	75	75	65	65... 84	**3RA21 4□-4RB46-□NB3**		3RV20 41-4RA10		
10	20	30	30	75	–	65	70... 90	**3RA21 4□-4YB46-□NB3**		3RV20 41-4YA10		
10	20	30	40	75	–	65	80...100	**3RA21 4□-4MB47-□NB3**		3RV20 41-4MA10	3RT2047-1NB30	

Order No. supplement for:		
• Standard DIN rail or screw mounting with no additional auxiliaries	**0**	**0**
• Standard DIN rail or screw mounting with 1 SPDT NO/NC MSP auxiliary (S2 frame contactor has 1NO/1NC integrated auxiliary)	**5**	**0 (S2)**
(S3 frame contactor has 1NO top mounted auxiliary)	**5**	**1 (S3)**

1) For auxilary switches, see accessories page 4/43.

2) Selection depends on motor full load amps. Horsepower ratings for reference only.

3) Adapters for standard mounting rail are included for all S3 starters and optional to be ordered as accessories for S2 non-reversing starters.

Note:

In the S2 frame, for 100kA SCCR versions, replace the prefix 3RA213x with 3RA215x. Rating exceptions would be the 59A and 65A versions having a 30kA SCCR at 480Y/277V. For UL 508 type E/F, order 3RV2938-1K Phase Barrier for field installation on all versions.

3RA2 Starters

Non-Reversing, DC Coil – up to 22 A

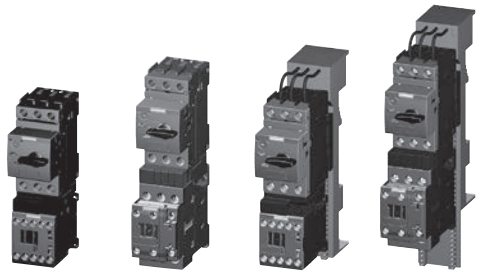

3RA21 10 3RA21 20 3RA21 10 3RA21 20

Direct-on-line starting

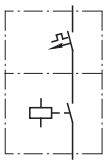

Rated control supply voltage 24 V DC
With screw connections

- The motor starter protector and contactor are mechanically and electrically connected by means of the link module.
- Auxiliary switches[1] on the motor starter protector and the contactor can be easily fitted due to the modular system.
- Integrated auxiliary switches:
  - Contactor size S00: 1 NO;
  - Contactor size S0: 1 NO + 1 NC

Combination Starter, UL508 Type F
All size S00 and S0 devices can be applied as Combination Starters with the addition of either of these line side connectors: 3RV29 28-1H, 3RV29 25-5EB or 3RV29 28-1K.

Size	UL Data: Single-phase HP ratings 115 V	230 V	Three-phase[2] HP ratings 200 V	230 V	460 V	575 V	SCCR at 480 V kA	FLA setting range inverse-time delayed overload release A	Consisting of the following single devices: Motor starter protector 3RV20	+ Contactor 3RT20	+ Link module + Busbar adapter[3] 3RA	Assembled starter, Screw terminals, Order No.	Weight approx. kg
Selection depends on motor full load amps													
S00	--	--	--	--	--	--	65	0.11…0.16	11-0AA10	15-1BB41	1921-1DA00 + 8US1251-5DS10	**3RA21 1□-0A□15-1BB4**	0.630
	--	--	--	--	--	--	65	0.14…0.2	11-0BA10			**3RA21 1□-0B□15-1BB4**	0.630
	--	--	--	--	--	--	65	0.18…0.25	11-0CA10			**3RA21 1□-0C□15-1BB4**	0.630
	--	--	--	--	--	--	65	0.22…0.32	11-0DA10			**3RA21 1□-0D□15-1BB4**	0.630
	--	--	--	--	--	--	65	0.28…0.4	11-0EA10			**3RA21 1□-0E□15-1BB4**	0.630
	--	--	--	--	--	--	65	0.35…0.5	11-0FA10			**3RA21 1□-0F□15-1BB4**	0.630
	--	--	--	--	--	--	65	0.45…0.63	11-0GA10			**3RA21 1□-0G□15-1BB4**	0.630
	--	--	--	--	--	--	65	0.55…0.8	11-0HA10			**3RA21 1□-0H□15-1BB4**	0.630
	--	--	--	--	--	1/2	65	0.7… 1	11-0JA10			**3RA21 1□-0J□15-1BB4**	0.630
	--	--	--	--	1/2	1/2	65	0.9… 1.25	11-0KA10			**3RA21 1□-0K□15-1BB4**	0.630
	--	1/10	--	--	3/4	3/4	65	1.1… 1.6	11-1AA10			**3RA21 1□-1A□15-1BB4**	0.630
	--	1/8	--	--	3/4	1	65	1.4… 2	11-1BA10			**3RA21 1□-1B□15-1BB4**	0.630
	--	1/6	1/2	1/2	1	1 1/2	65	1.8… 2.5	11-1CA10			**3RA21 1□-1C□15-1BB4**	0.630
	1/10	1/4	1/2	3/4	1 1/2	2	65	2.2… 3.2	11-1DA10			**3RA21 1□-1D□15-1BB4**	0.630
	1/8	1/3	3/4	3/4	2	3	65	2.8… 4	11-1EA10			**3RA21 1□-1E□15-1BB4**	0.630
	1/6	1/2	1	1	3	3	65	3.5… 5	11-1FA10			**3RA21 1□-1F□15-1BB4**	0.630
	1/4	1/2	1	1 1/2	3	5	65	4.5… 6.3	11-1GA10			**3RA21 1□-1G□15-1BB4**	0.630
	1/3	1	2	2	5	5	65	5.5… 8	11-1HA10	16-1BB41		**3RA21 1□-1H□16-1BB4**	0.630
	1/2	1 1/2	2	3	5	7 1/2	65	7… 10	11-1JA10			**3RA21 1□-1J□16-1BB4**	0.630
	1/2	2	3	3	7 1/2	10	65	9… 12	11-1KA10	17-1BB41		**3RA21 1□-1K□17-1BB4**	0.630
	1	2	3	5	10	--	65	11…16	11-4AA10	18-1BB41		**3RA21 1□-4A□18-1BB4**	0.630
S0	1/6	1/2	1	1	3	3	65	3.5… 5	11-1FA10	24-1BB40	2921-1BA00 + 8US1251-5NT10	**3RA21 2□-1F□24-0BB4**	0.948
	1/4	1/2	1	1 1/2	3	5	65	4.5… 6.3	11-1GA10			**3RA21 2□-1G□24-0BB4**	0.948
	1/3	1	2	2	5	5	65	5.5… 8	11-1HA10			**3RA21 2□-1H□24-0BB4**	0.948
	1/2	1 1/2	2	3	5	7 1/2	65	7… 10	11-1JA10			**3RA21 2□-1J□24-0BB4**	0.948
	1/2	2	3	3	7 1/2	10	65	9… 12.5	11-1KA10			**3RA21 2□-1K□24-0BB4**	0.948
	1	2	3	5	10	--	65	11… 16	21-4AA10	26-1BB40		**3RA21 2□-4A□26-0BB4**	0.948
	1 1/2	3	5	5	10	--	65	14… 20	21-4BA10			**3RA21 2□-4B□26-0BB4**	0.948
	1 1/2	3	5	7 1/2	15	--	50	17… 22	21-4CA10	27-1BB40		**3RA21 2□-4C□27-0BB4**	0.948
	2	3	5	7 1/2	15	--	50	20… 25	21-4DA10			**3RA21 2□-4D□27-0BB4**	0.948
	2	5	7 1/2	10	20	--	50	27… 32	21-4EA10			**3RA21 2□-4E□27-0BB4**	0.948

Order No. supplement for:

• Standard DIN rail or screw mounting with no additional auxiliaries	**0**	**A**
• Standard DIN rail or screw mounting with 1 SPDT NO/NC MSP auxiliary (S00 frame contactor has 1NO auxiliary and S0 frame contactor has 1NO/1NC auxiliary)	**5**	**A**
• With Fast Bus adaptor and no additional auxiliaries	**0**	**D**
• With Fast Bus adaptor and 1 SPDT NO/NC MSP auxiliary (S00 frame contactor has 1NO auxiliary and S0 frame contactor has 1NO/1NC auxiliary)	**5**	**D**

1) For auxiliary switches, see Accessories page 4/43.

2) Selection depends on the concrete motor full load amps.
HP ratings for reference only.

3) Use only for mounting starter on 8US Fast Bus busbar systems.

Selection and ordering data

Direct-on-line starting

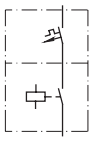

For 60mm Fast Bus busbar systems

- The motor starter protector and contactor are mechanically and electrically connected by means of the link module.
- Auxiliary switches[1]) on the motor starter protector and the contactor can be easily fitted due to the modular system.
- Integrated auxiliary switches:
  - Contactor size S2: 1 NO & 1 NC
  - Contactor size S3: 1 NO & 1 NC

Combination Starter, UL508 Type F

- Size S2 devices can be applied as Combination Starters. For versions of 50A or higher, the addition of a 3RV2938-1K line side phase barrier is required.
- Size S3 devices can be applied as Combination Starters with the addition of a 3RT1946-4GA07 line side terminal kit

Single-Phase HP Ratings 115V	Single-Phase HP Ratings 230V	Three-Phase[2]) HP ratings 200V	Three-Phase[2]) HP ratings 230V	Three-Phase[2]) HP ratings 460V	Three-Phase[2]) HP ratings 575V	SCCR at 480Y/277V kA	FLA setting range Inverse-time delayed overload release A	Starter Order No.	Size	Consisting of the following individual devices: Motor starter protector	+ Contactor	+ Link module + Adapter for standard mounting rail[3])
110VAC 50Hz / 120 VAC 60Hz												
3	7.5	10	15	30	40	65	22... 32	**3RA21 3□-4ED35-□AK6**	**S2**	3RV20 31-4EA10	3RT2035-1AK60	3RA2931-1AA00 + 8US1261-6MT10
3	10	15	15	40	50	65	28... 36	**3RA21 3□-4PD36-□AK6**		3RV20 31-4PA10	3RT2036-1AK60	
3	10	15	15	40	50	65	32... 40	**3RA21 3□-4UD36-□AK6**		3RV20 31-4UA10		
3	10	15	15	40	50	65	35... 45	**3RA21 3□-4VD36-□AK6**		3RV20 31-4VA10		
5	10	20	20	50	50	65	42... 52	**3RA21 3□-4WD37-□AK6**		3RV20 31-4WA10	3RT2037-1AK60	
5	15	20	25	50	60	20	49... 59	**3RA21 3□-4XD38-□AK6**		3RV20 31-4XA10	3RT2038-1AK60	
5	15	20	25	50	60	20	54... 65	**3RA21 3□-4JD38-□AK6**		3RV20 31-4JA10		
7.5	15	25	30	60	60	65	28... 40	**3RA21 4□-4FD45-□AK6**	**S3**	3RV20 41-4FA10	3RT2045-1AK60	3RA1941-1AA00 + 8US1211-4TR00
7.5	15	25	30	60	60	65	36... 50	**3RA21 4□-4HD45-□AK6**		3RV20 41-4HA10		
7.5	15	25	30	60	60	65	45... 63	**3RA21 4□-4JD45-□AK6**		3RV20 41-4JA10		
10	20	30	30	75	75	65	57... 75	**3RA21 4□-4KD46-□AK6**		3RV20 41-4KA10	3RT2046-1AK60	
10	20	30	30	75	75	65	65... 84	**3RA21 4□-4RD46-□AK6**		3RV20 41-4RA10		
10	20	30	30	75	–	65	75... 93	**3RA21 4□-4YD46-□AK6**		3RV20 41-4YA10		
10	20	30	40	75	–	65	80...100	**3RA21 4□-4MD47-□AK6**		3RV20 41-4MA10	3RT2047-1AK60	
24V UC												
3	7.5	10	15	30	40	65	22... 32	**3RA21 3□-4ED35-□NB3**	**S2**	3RV20 31-4EA10	3RT2035-1NB30	3RA2931-1AA00 + 8US1261-6MT10
3	10	15	15	40	50	65	28... 36	**3RA21 3□-4PD36-□NB3**		3RV20 31-4PA10	3RT2036-1NB30	
3	10	15	15	40	50	65	32... 40	**3RA21 3□-4UD36-□NB3**		3RV20 31-4UA10		
3	10	15	15	40	50	65	35... 45	**3RA21 3□-4VD36-□NB3**		3RV20 31-4VA10		
5	10	20	20	50	50	65	42... 52	**3RA21 3□-4WD37-□NB3**		3RV20 31-4WA10	3RT2037-1NB30	
5	15	20	25	50	60	20	49... 59	**3RA21 3□-4XD38-□NB3**		3RV20 31-4XA10	3RT2038-1NB30	
5	15	20	25	50	60	20	54... 65	**3RA21 3□-4JD38-□NB3**		3RV20 31-4JA10		
7.5	15	25	30	60	60	65	28... 40	**3RA21 4□-4FD45-□NB3**	**S3**	3RV20 41-4FA10	3RT2045-1NB30	3RA1941-1BA00 + 8US1211-4TR00
7.5	15	25	30	60	60	65	36... 50	**3RA21 4□-4HD45-□NB3**		3RV20 41-4HA10		
7.5	15	25	30	60	60	65	45... 63	**3RA21 4□-4JD45-□NB3**		3RV20 41-4JA10		
10	20	30	30	75	75	65	57... 75	**3RA21 4□-4KD46-□NB3**		3RV20 41-4KA10	3RT2046-1NB30	
10	20	30	30	75	75	65	65... 84	**3RA21 4□-4RD46-□NB3**		3RV20 41-4RA10		
10	20	30	30	75	–	65	75... 93	**3RA21 4□-4YD46-□NB3**		3RV20 41-4YA10		
10	20	30	40	75	–	65	80...100	**3RA21 4□-4MD47-□NB3**		3RV20 41-4MA10	3RT2047-1NB30	

Order No. supplement for:

• Standard DIN rail or screw mounting with no additional auxiliaries	**0**	**0**
• Standard DIN rail or screw mounting with 1 SPDT NO/NC MSP auxiliary		
(S2 frame contactor has 1NO/1NC integrated auxiliary)	**5**	**0 (S2)**
(S3 frame contactor has 1NO top mounted auxiliary)	**5**	**1 (S3)**

1) For auxiliary switches, see Accessories page 4/43.

2) Selection depends on motor full load amps. Horsepower ratings for reference only.

Note:

In the S2 frame, for 100kA SCCR versions, replace the prefix 3RA213x with 3RA215x. Rating exceptions would be the 59A and 65A versions having a 30kA SCCR at 480Y/277V. For UL 508 type E/F, order 3RV2938-1K Phase Barrier for field installation on all versions.

Selection and ordering data

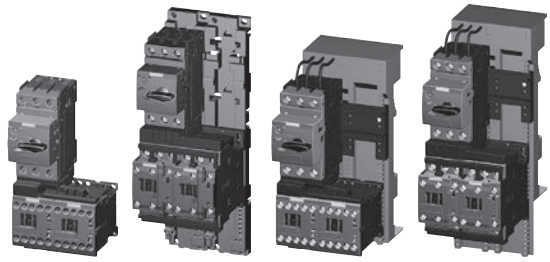

3RA22 10 3RA22 20 3RA22 10 3RA22 20

Reversing duty

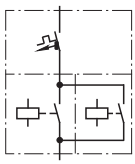

Rated control supply voltage 50/60 Hz 110/120 V AC
With screw connections

- The motor starter protector and contactor are mechanically and electrically connected by means of the link module.
- Auxiliary switches[1] on the motor starter protector and the contactor can be easily fitted due to the modular system.
- With the contactor S0, an integrated NO contact is available for free use.

Combination Starter, UL508 Type F
All size S00 and S0 devices can be applied as Combination Starters with the addition of either of these line side connectors: 3RV29 28-1H, 3RV29 25-5EB or 3RV29 28-1K.

Size	UL Data: Single-phase HP ratings 115 V	230 V	Three-phase[2] HP ratings 200 V	230 V	460 V	575 V	SCCR at 480 V kA	FLA setting range inverse-time delayed overload release A	Consisting of the following single devices: Motor starter protector	+ 2 contactors	+ Link module + Assembly kit RH/RS[3]	Assembled starter, Screw terminals: Order No.	Weight approx. kg
Selection depends on motor full load amps													
									3RV20	**3RT20**	**3RA**		
S00	--	--	--	--	--	--	65	0.11…0.16	11-0AA10	15-1AK62	1921-1DA00	**3RA22 10-0A □15-2AK6**	0.824
	--	--	--	--	--	--	65	0.14…0.2	11-0BA10		+ 2913-2AA1[4]	**3RA22 10-0B □15-2AK6**	0.824
	--	--	--	--	--	--	65	0.18…0.25	11-0CA10		+ 2913-1DB1 (RS)	**3RA22 10-0C □15-2AK6**	0.824
	--	--	--	--	--	--	65	0.22…0.32	11-0DA10			**3RA22 10-0D □15-2AK6**	0.824
	--	--	--	--	--	--	65	0.28…0.4	11-0EA10			**3RA22 10-0E □15-2AK6**	0.824
	--	--	--	--	--	--	65	0.35…0.5	11-0FA10			**3RA22 10-0F □15-2AK6**	0.824
	--	--	--	--	--	--	65	0.45…0.63	11-0GA10			**3RA22 10-0G □15-2AK6**	0.824
	--	--	--	--	--	--	65	0.55…0.8	11-0HA10			**3RA22 10-0H □15-2AK6**	0.824
	--	--	--	--	--	1/2	65	0.7… 1	11-0JA10			**3RA22 10-0J □15-2AK6**	0.824
	--	--	--	--	1/2	1/2	65	0.9… 1.25	11-0KA10			**3RA22 10-0K □15-2AK6**	0.824
	--	1/10	--	--	3/4	3/4	65	1.1… 1.6	11-1AA10			**3RA22 10-1A □15-2AK6**	0.824
	--	1/8	--	--	3/4	1	65	1.4… 2	11-1BA10			**3RA22 10-1B □15-2AK6**	0.824
	--	1/6	1/2	1/2	1	1 1/2	65	1.8… 2.5	11-1CA10			**3RA22 10-1C □15-2AK6**	0.824
	1/10	1/4	1/2	3/4	1 1/2	2	65	2.2… 3.2	11-1DA10			**3RA22 10-1D □15-2AK6**	0.824
	1/8	1/3	3/4	3/4	2	3	65	2.8… 4	11-1EA10			**3RA22 10-1E □15-2AK6**	0.824
	1/6	1/2	1	1	3	3	65	3.5… 5	11-1FA10			**3RA22 10-1F □15-2AK6**	0.824
	1/4	1/2	1	1 1/2	3	5	65	4.5… 6.3	11-1GA10			**3RA22 10-1G □15-2AK6**	0.824
	1/3	1	2	2	5	5	65	5.5… 8	11-1HA10	16-1AK62		**3RA22 10-1H □16-2AK6**	0.824
	1/2	1 1/2	2	3	5	7 1/2	65	7… 10	11-1JA10			**3RA22 10-1J □16-2AK6**	0.824
	1/2	2	3	3	7 1/2	10	65	9… 12	11-1KA10	17-1AK62		**3RA22 10-1K □17-2AK6**	0.824
	1	2	3	5	10	--	65	11…16	11-4AA10	18-1AK62		**3RA22 10-4A □18-2AK6**	0.824
S0	1/6	1/2	1	1	3	3	65	3.5… 5	11-1FA10	24-1AK60	2921-1AA00	**3RA22 20-1F □24-0AK6**	1.434
	1/4	1/2	1	1 1/2	3	5	65	4.5… 6.3	11-1GA10		+ 2923-1BB1 (RH)	**3RA22 20-1G □24-0AK6**	1.434
	1/3	1	2	2	5	5	65	5.5… 8	11-1HA10		+ 2923-1DB1 (RS)	**3RA22 20-1H □24-0AK6**	1.434
	1/2	1 1/2	2	3	5	7 1/2	65	7… 10	11-1JA10			**3RA22 20-1J □24-0AK6**	1.434
	1/2	2	3	3	7 1/2	10	65	9… 12.5	11-1KA10			**3RA22 20-1K □24-0AK6**	1.434
	1	2	3	5	10	--	65	11… 16	21-4AA10	26-1AK60		**3RA22 20-4A □26-0AK6**	1.434
	1 1/2	3	5	5	10	--	65	14… 20	21-4BA10			**3RA22 20-4B □26-0AK6**	1.434
	1 1/2	3	5	7 1/2	15	--	50	17… 22	21-4CA10	27-1AK60		**3RA22 20-4C □27-0AK6**	1.434
	2	3	5	7 1/2	15	--	50	20… 25	21-4DA10			**3RA22 20-4D □27-0AK6**	1.434
	2	5	7 1/2	10	20	--	50	27… 32	21-4EA10			**3RA22 20-4E □27-0AK6**	1.434

				Add. weight
Order No. supplement for mounting onto standard mounting rail or screw fixing				
• Without standard mounting rail adapter for size S00[4]		**1**	**A**	
• With 2 standard mounting rail adapters for size S0		**2**	**B**	
Screw fixing with 2 push-in lugs each per motor starter is possible				
Order No. supplement for mounting onto Fastbus 60mm busbar system	for size S00	**1**	**D**	0.486
With 8US Fast Bus busbar adapter	for size S0	**2**	**D**	0.293

1) For push-in lugs and auxiliary switches, see Accessories on pages 4/43 and 4/51.

2) Selection depends on the motor full load amps. HP ratings for reference only.

3) According to ordering option:
RH = assembly kit for reversing duty with standard rail mounting adapter in size S0.
RS = assembly kit for reversing duty with 8US Fast Bus busbar mounting.

4) With standard rail mounting or screw fixing, the 3RA29 13-2AA1 wiring kit is required for size S00.

3RA2 Starter

Reversing, AC Coil – up to 100 A

Selection and ordering data

3RA12 40

Reversing duty

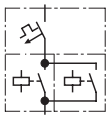

For 35 mm standard mounting rail or screw mounting

- All starters are suitable for use in Group Installation applications per NEC 430-53 (c)
- Motor starter protector and contactor are linked electrically and mechanically by means of a link module and adapter plate
- Starter includes both electrical and mechanical interlocks
- Auxiliary switches [1]) can be added easily to the MSP and the contactor

Combination Starter, UL508 Type F

- Size S2 devices can be applied as Combination Starters. For versions of 50A or higher, the addition of a 3RV2938-1K line side phase barrier is required.
- Size S3 devices can be applied as Combination Starters with the addition of a 3RT1946-4GA07 line side terminal kit
- SCCR: 65kA at 480V

Single-Phase HP Ratings		Three-Phase[2]) HP ratings				FLA setting range Inverse-time delayed overload	Starter Order No.	Size	Consisting of the following individual devices: Motor starter protector	+ 2 Contactors +	Link module + assembly kit RH[3])
115V	230V	200V	230V	460V	575V	A					
110VAC 50Hz / 120VAC 60Hz											
3	7.5	10	15	30	40	22 ... 32	For customer assembly	S2	3RV20 31-4EA10	3RT2035-1AK60	3RA2931-1AA00 + 3RA2933-1BB1
3	10	15	15	40	50	28 ... 36			3RV20 31-4PA10	3RT2036-1AK60	
3	10	15	15	40	50	32 ... 40			3RV20 31-4UA10		
3	10	15	15	40	50	35 ... 45			3RV20 31-4VA10		
5	10	20	20	50	50	42 ... 52			3RV20 31-4WA10	3RT2037-1AK60	
5	15	20	25	50	60	49 ... 59			3RV20 31-4XA10	3RT2038-1AK60	
5	15	20	25	50	60	54 ... 65			3RV20 31-4JA10		
7.5	15	25	30	60	60	28 ... 40	For customer assembly	S3	3RV20 41-4FA10	3RT2045-1AK60	3RA1941-1AA00 + 3RA1943-1B[4])
7.5	15	25	30	60	60	36 ... 50			3RV20 41-4HA10		
7.5	15	25	30	60	60	45 ... 63			3RV20 41-4JA10		
10	20	30	30	75	75	57 ... 75			3RV20 41-4KA10	3RT2046-1AK60	
10	20	30	30	75	75	65 ... 84			3RV20 41-4RA10		
10	20	30	30	75	–	75 ... 93			3RV20 41-4YA10		
10	20	30	40	75	–	80 ...100			3RV20 41-4MA10	3RT2047-1AK60	

24VDC											
3	7.5	10	15	30	40	22... 32	For customer assembly	S2	3RV20 31-4EA10	3RT2035-1NB30	3RA2931-1AA00 + 3RA2933-1BB1
3	10	15	15	40	50	28... 36			3RV20 31-4PA10	3RT2036-1NB30	
3	10	15	15	40	50	32... 40			3RV20 31-4UA10		
3	10	15	15	40	50	35... 45			3RV20 31-4VA10		
5	10	20	20	50	50	42... 52			3RV20 31-4WA10	3RT2037-1NB30	
5	15	20	25	50	60	49... 59			3RV20 31-4XA10	3RT2038-1NB30	
5	15	20	25	50	60	54... 65			3RV20 31-4JA10		
7.5	15	25	30	60	60	28 ... 40	For customer assembly	S3	3RV20 41-4FA10	3RT2045-1NB30	3RA1941-1BA00 + 3RA1943-1B[4])
7.5	15	25	30	60	60	36 ... 50			3RV20 41-4HA10		
7.5	15	25	30	60	60	45 ... 63			3RV20 41-4JA10		
10	20	30	30	75	75	57 ... 75			3RV20 41-4KA10	3RT2046-1NB30	
10	20	30	30	75	75	65 ... 84			3RV20 41-4RA10		
10	20	30	30	75	–	75 ... 93			3RV20 41-4YA10		
10	20	30	40	75	–	80 ...100			3RV20 41-4MA10	3RT2047-1NB30	

RH = Reversing duty for rail mounting.

1) For auxiliary switches, see Accessories page 4/43.

2) Selection depends on motor full load amps. Horse power ratings for reference only.

3) Adapters for standard mounting rail are also suitable for screw mounting.

4) Mechanical interlock must be ordered separately; see Accessories page 4/49

3RA2 Starter

Reversing, DC Coil – up to 22 A

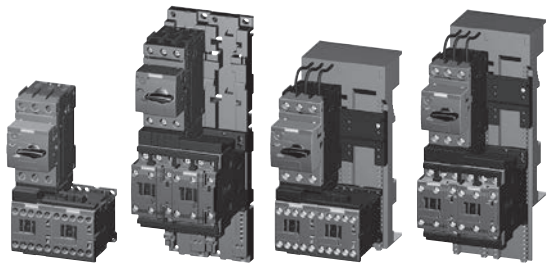

3RA22 10 3RA22 20 3RA22 10 3RA22 20

Reversing duty

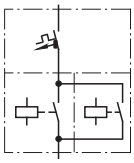

Rated control supply voltage 24 V DC
With screw connections

- The motor starter protector and contactor are mechanically and electrically connected by means of the link module.
- Auxiliary switches[1] on the motor starter protector and the contactor can be easily fitted due to the modular system.
- With the contactor S0, an integrated NO contact is available for free use.

Combination Starter, UL508 Type F
All size S00 and S0 devices can be applied as Combination Starters with the addition of either of these line side connectors: 3RV29 28-1H, 3RV29 25-5EB or 3RV29 28-1K.

Size	UL Data: Single-phase HP ratings 115 V	230 V	Three-phase[2] HP ratings 200 V	230 V	460 V	575 V	SCCR at 480 V kA	FLA setting range inverse-time delayed overload release A	Consisting of the following single devices: Motor starter protector	+ 2 contactors	+ Link module + Assembly kit RH/RS[3]	Assembled starter Screw terminals Order No.	Weight approx. kg
Selection depends on motor full load amps													
									3RV20	**3RT20**	**3RA**		
S00	--	--	--	--	--	--	65	0.11…0.16	11-0AA10	15-1BB42	1921-1DA00 '+	**3RA22 10-0A□15-2BB4**	0.934
	--	--	--	--	--	--	65	0.14…0.2	11-0BA10		2913-2AA1[4] '+	**3RA22 10-0B□15-2BB4**	0.934
	--	--	--	--	--	--	65	0.18…0.25	11-0CA10		2913-1DB1 (RS)	**3RA22 10-0C□15-2BB4**	0.934
	--	--	--	--	--	--	65	0.22…0.32	11-0DA10			**3RA22 10-0D□15-1BB4**	0.934
	--	--	--	--	--	--	65	0.28…0.4	11-0EA10			**3RA22 10-0E□15-2BB4**	0.934
	--	--	--	--	--	--	65	0.35…0.5	11-0FA10			**3RA22 10-0F□15-1BB4**	0.934
	--	--	--	--	--	--	65	0.45…0.63	11-0GA10			**3RA22 10-0G□15-2BB4**	0.934
	--	--	--	--	--	--	65	0.55…0.8	11-0HA10			**3RA22 10-0H□15-2BB4**	0.934
	--	--	--	--	--	1/2	65	0.7… 1	11-0JA10			**3RA22 10-0J□15-2BB4**	0.934
	--	--	--	--	1/2	1/2	65	0.9… 1.25	11-0KA10			**3RA22 10-0K□15-2BB4**	0.934
	--	1/10	--	--	3/4	3/4	65	1.1… 1.6	11-1AA10			**3RA22 10-1A□15-2BB4**	0.934
	--	1/8	--	--	3/4	1	65	1.4… 2	11-1BA10			**3RA22 10-1B□15-2BB4**	0.934
	--	1/6	1/2	1/2	1	1 1/2	65	1.8… 2.5	11-1CA10			**3RA22 10-1C□15-2BB4**	0.934
	1/10	1/4	1/2	3/4	1 1/2	2	65	2.2… 3.2	11-1DA10			**3RA22 10-1D□15-2BB4**	0.934
	1/8	1/3	3/4	3/4	2	3	65	2.8… 4	11-1EA10			**3RA22 10-1E□15-2BB4**	0.934
	1/6	1/2	1	1	3	3	65	3.5… 5	11-1FA10			**3RA22 10-1F□15-2BB4**	0.934
	1/4	1/2	1	1 1/2	3	5	65	4.5… 6.3	11-1GA10			**3RA22 10-1G□15-2BB4**	0.934
	1/3	1	2	2	5	5	65	5.5… 8	11-1HA10	16-1BB42		**3RA22 10-1H□16-2BB4**	0.934
	1/2	1 1/2	2	3	5	7 1/2	65	7… 10	11-1JA10			**3RA22 10-1J□16-2BB4**	0.934
	1/2	2	3	3	7 1/2	10	65	9… 12	11-1KA10	17-1BB42		**3RA22 10-1K□17-2BB4**	0.934
	1	2	3	5	10	--	65	11…16	11-4AA10	18-1BB42		**3RA22 10-4A□18-2BB4**	0.934
S0	1/6	1/2	1	1	3	3	65	3.5… 5	11-1FA10	24-1BB40	2921-1BA00 '+	**3RA22 20-1F□24-0BB4**	1.811
	1/4	1/2	1	1 1/2	3	5	65	4.5… 6.3	11-1GA10		2923-1BB1 (RH) '+	**3RA22 20-1G□24-0BB4**	1.811
	1/3	1	2	2	5	5	65	5.5… 8	11-1HA10		2923-1DB1 (RS)	**3RA22 20-1H□24-0BB4**	1.811
	1/2	1 1/2	2	3	5	7 1/2	65	7… 10	11-1JA10			**3RA22 20-1J□24-0BB4**	1.811
	1/2	2	3	3	7 1/2	10	65	9… 12.5	11-1KA10			**3RA22 20-1K□24-0BB4**	1.811
	1	2	3	5	10	--	65	11… 16	21-4AA10	26-1BB40		**3RA22 20-4A□26-0BB4**	1.811
	1 1/2	3	5	5	10	--	65	14… 20	21-4BA10			**3RA22 20-4B□26-0BB4**	1.811
	1 1/2	3	5	7 1/2	15	--	50	17… 22	21-4CA10	27-1BB40		**3RA22 20-4C□27-0BB4**	1.811
	2	3	5	7 1/2	15	--	50	20… 25	21-4DA10			**3RA22 20-4D□27-0BB4**	1.811
	2	5	7 1/2	10	20	--	50	27… 32	21-4EA10			**3RA22 20-4E□27-0BB4**	1.811

			Add. weight
Order No. supplement for mounting onto standard mounting rail or screw fixing			
• Without standard mounting rail adapter for size S00[4]	**1**	**A**	
• With 2 standard mounting rail adapters for size S0	**2**	**B**	
Screw fixing with 2 push-in lugs each per motor starter is possible			
Order No. supplement for mounting onto Fastbus 60mm busbar system — for size S00	**1**	**D**	0.486
With 8US Fast Bus busbar adapter — for size S0	**2**	**D**	0.306

1) For push-in lugs and auxiliary switches, see Accessories on pages 4/43 and 4/51.

2) Selection depends on the motor full load amps. HP ratings for reference only.

3) Code for abbreviations:

RH = assembly kit for reversing duty with standard rail mounting adapter in size S0.

RS = assembly kit for reversing duty with 8US Fast Bus busbar mounting.

4) With standard rail mounting or screw fixing, the 3RA29 13-2AA1 wiring kit and link module are required for size S00.

Reversing Fast Bus®, AC and DC Coil – up to 100 A

Selection and ordering data

Representative image of assembled starter

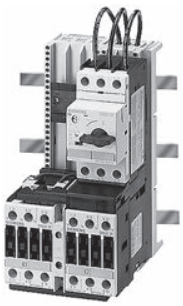

Reversing duty

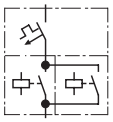

For 60 mm Fast Bus busbar systems

- All starters are suitable for use in Group Installation applications per NEC 430-53 (c)
- Motor starter protector and contactor are linked electrically and mechanically by means of a link module and mounted on a Fast-bus Shoe
- Starter includes both electrical and mechanical interlocks
- Auxiliary switches[1] can be added easily to the MSP and the contactor
- Size S3 is kit form only - assembly required

Combination Starter, UL508 Type F

- Size S2 devices can be applied as Combination Starters
- Size S3 devices can be applied as Combination Starters with the addition of a 3RT2946-4GA07 line side terminal kit
- SCCR: 65kA at 480V

Single-Phase HP Ratings 115V	Single-Phase HP Ratings 230V	Three-Phase[2] HP ratings 200V	Three-Phase[2] HP ratings 230V	Three-Phase[2] HP ratings 460V	Three-Phase[2] HP ratings 575V	FLA setting range Inverse-time delayed overload release A	Starter Order No.	Size	Consisting of the following individual devices: Motor starter protector	+ Contactor	+ Link module + Adapter shoe for Fastbus
110VAC 50Hz / 120VAC 60Hz											
3	7.5	10	15	30	40	22... 32	For customer assembly	S2	3RV20 31-4EA10	3RT2035-1AK60	3RA2931-1AA00 + 3RA2933-1DB1
3	10	15	15	40	50	28... 36			3RV20 31-4PA10	3RT2036-1AK60	
3	10	15	15	40	50	32... 40			3RV20 31-4UA10		
3	10	15	15	40	50	35... 45			3RV20 31-4VA10		
5	10	20	20	50	50	42... 52			3RV20 31-4WA10	3RT2037-1AK60	
5	15	20	25	50	60	49... 59			3RV20 31-4XA10	3RT2038-1AK60	
5	15	20	25	50	60	54... 65			3RV20 31-4JA10		
7.5	15	25	30	60	60	28... 40	For customer assembly	S3	3RV20 41-4FA10	3RT2045-1AK60	3RA1941-1AA00 + 3RA1943-2A[3]
7.5	15	25	30	60	60	36... 50			3RV20 41-4HA10		
7.5	15	25	30	60	60	32... 40			3RV20 41-4JA10		
10	20	30	30	75	75	57... 75			3RV20 41-4KA10	3RT2046-1AK60	
10	20	30	30	75	75	42... 52			3RV20 41-4RA10		
10	20	30	30	75	–	75... 93			3RV20 41-4YA10		
10	20	30	40	75	–	80...100			3RV20 41-4MA10	3RT2047-1AK60	
24VDC											
3	7.5	10	15	30	40	22... 32	For customer assembly	S2	3RV20 31-4EA10	3RT2035-1NB30	3RA2931-1AA00 + 3RA2933-1DB1
3	10	15	15	40	50	28... 36			3RV20 31-4PA10	3RT2036-1NB30	
3	10	15	15	40	50	32... 40			3RV20 31-4UA10		
3	10	15	15	40	50	35... 45			3RV20 31-4VA10		
5	10	20	20	50	50	42... 52			3RV20 31-4WA10	3RT2037-1NB30	
5	15	20	25	50	60	49... 59			3RV20 31-4XA10	3RT2038-1NB30	
5	15	20	25	50	60	54... 65			3RV20 31-4JA10		
7.5	15	25	30	60	60	28... 40	For customer assembly	S3	3RV20 41-4FA10	3RT2045-1NB30	3RA1941-1BA00 + 3RA 1943-2A[3]
7.5	15	25	30	60	60	36... 50			3RV20 41-4HA10		
7.5	15	25	30	60	60	45... 63			3RV20 41-4JA10		
10	20	30	30	75	75	57... 75			3RV20 41-4KA10	3RT2046-1NB30	
10	20	30	30	75	75	65... 84			3RV20 41-4RA10		
10	20	30	30	75	–	75... 93			3RV20 41-4YA10		
10	20	30	40	75	–	80...100			3RV20 41-4MA10	3RT2047-1NB30	

RH = Reversing duty for rail mounting.

1) For auxiliary switches, see Accessories page 4/43.

2) Selection depends on motor full load amps. Horsepower ratings for reference only.

3) Mechanical interlock must be ordered separately; see Accessories page 4/49.

Overview

The accessories listed here are parts and add-ons for the 3RA2 direct-on-line and reversing starters as well as components for the customer assembly of motor starters

Selection and ordering data

3RV29 01-1E

3RV29 01-2E

3RV29 01-1A

3RV29 01-2A

3RV29 02-1A

3RV29 02-2D

	For MSPs Size	Screw Terminals Order No.	Weight approx. kg	Spring-type Terminals Order No.	Weight approx. kg
Auxillary switches for motor starter protectors [1]					
Transverse auxillary switches For front mounting					
1 CO	S00 ... S3	**3RV29 01-1D**	0.014	—	
1 NO + 1 NC	S00 ... S3	**3RV29 01-1E**	0.016	**3RV29 01-2E**	0.016
Lateral auxillary switches Mountable on the left					
1 NO + 1 NC	S00 ... S3	**3RV29 01-1A**	0.036	**3RV29 01-2A**	0.035

1 One transverse auxillary switch and one lateral auxillary switch can be attached per motor starter protector.
When the lateral auxillary switch with 2 NO + 2 NC is used, a transverse auxillary switch is not allowed.

Rated control supply voltage Us				For MSPs	Screw Terminals	Weight approx.	Spring-type Terminals	Weight approx.
AC 50 Hz V	AC 60 Hz V	AC 50/60 Hz 100% ON period [1] V	AC/DC 50/60 Hz, DC 5s ON period [2] V	Size	Order No.	kg	Order No.	kg
Auxillary releases for motor starter protectors [3]								
Undervoltage releases								
415	480	—	—	S00 ... S3	**3RV29 02-1AV1**	0.117	—	
Shunt releases								
—	—	20…24	20...70	S00 ... S3	**3RV29 02-1DB0**	0.119	**3RV29 02-2DB0**	0.115
—	—	90…110	70...190		**3RV29 02-1DF0**	0.119	**3RV29 02-2DF0**	0.115

1 The voltage range is valid for 100% (infinite) ON period. The response voltage lies at 0.9 of the lower limit of the voltage range.
2 The voltage range is valid for 5s ON period at AC 50 Hz/60 Hz and DC. The response voltage lies at 0.85 of the lower limit of the voltage range.
3 One auxiliary release can be mounted on the right per motor starter protector
(does not apply to 3RV21 motor starter protectors with overload reset function).

Selection and ordering data

	For Conductors Size	Version		Screw Terminals Order No.	Weight approx. kg	Spring-type Terminals Order No.	Weight approx. kg
Auxillary switch blocks for snapping on the front for contactors							
Cable entry from below	S00 ... S3	1-pole	1 NC	**3RH29 11-1BA10**	0.020	—	
3RH29 11-1BA10	S00 ... S3	1-pole	1 NO	**3RH29 11-1BA01**	0.020	—	
	S00 ... S3	2-pole	1 NO + 1 NC	**3RH29 11-1MA11**	0.050	—	
3RH29 11-1MA20	S00 ... S3	2-pole	2 NO	**3RH29 11-1MA20**	0.050	—	
Cable entry from two sides	S00 ... S3	4-pole	2 NO + 2 NC	**3RH29 11-1FA22**	0.060	**3RH29 11-2FA22**	0.049
	S00	2-pole	1 NO + 1 NC	**3RH29 11-1DA11**	0.039	**3RH29 11-2DA11**	0.050
3RH29 11-1FA22	S00	2-pole	2 NC	**3RH29 11-1DA02**	0.039	**3RH29 11-2DA02**	0.050
	S0 ... S3	2-pole	1 NO + 1 NC	**3RH29 21-1DA11**	0.039	**3RH29 21-2DA11**	0.050
	S0 ... S3	2-pole	2 NC	**3RH29 21-1DA02**	0.041	**3RH29 21-2DA02**	0.050
	S0 ... S3	2-pole	2 NO	**3RH29 21-1DA20**	0.041	**3RH29 21-2DA20**	0.050
Laterally mountable auxiliary switch blocks for contactors							
	S00	2 NC		**3RH29 11-1DA02**	0.020	**3RH29 11-2DA02**	0.050
	S00	1 NO + 1 NC		**3RH29 11-1DA11**	0.040	**3RH29 11-2DA11**	0.050
3RH29 11-1DA11	S00	1 NO		**3RH29 11-1DA20**	0.040	**3RH29 11-2DA20**	0.050
	S0 ... S3	2 NC		**3RH29 21-1DA02**	0.050	**3RH29 21-2DA02**	0.050
	S0 ... S3	1 NO + 1 NC		**3RH29 21-1DA11**	0.050	**3RH29 21-2DA11**	0.050
	S0 ... S3	2 NO		**3RH29 21-1DA20**	0.050	**3RH29 21-2DA20**	0.050
Connection modules for contactors with screw terminals							
Adaptors for contactors	Ambient temperature $T_{u\,max}$ = 60 °C						
	S00	Rated operational current I_e at AC-3/400 V: 20A		**3RT19 16-4RD01**	0.020	—	
3RT19 26-4RD01	S0	Rated operational current I_e at AC-3/400 V: 25A		**3RT19 26-4RD01**	0.020	—	
Plugs for contactors	S00, S0			**3RT19 00-4RE01**	0.025	—	
3RT19 00-4RE01							

Selection and ordering data

For Conductors Size	Version	Screw Terminals Order No.	Weight approx. kg
Auxillary switch blocks for snapping on the front for contactors			

3RV29 28-1H

Note: UL 508 demands for “Combination Motor Controller Type E” 1” air gaps and 2” creepage distances at lineside. The following terminal blocks must be used in S3 MSP’s 3RV10. The S2 MSP 3RV10 conforms with stipulated air gaps and creepage distances without terminal block.
Terminal blocks are not required for use according to CSA. With size S0 these terminal blocks cannot be used in combination with 3-phase busbars 3RV19.5. This also applies to size S3 in combination with transverse auxiliary switches.

3RV29 28-1K

3RT19 46-4GA07

Terminal block type E for extended air/creepage distance (1” and 2”)	S00, S0	**3RV29 28-1H**	0.120
	S00, S0	**3RV29 28-1K**	0.120
	S2	**3RV29 38-1K**	0.120
	S3	**3RT29 46-4GA07**	0.120

Selection and ordering data

	For Conductors Size	Version	Rated control supply voltage U_S AC V	DC V	Surge Suppressors Order No.	Weight approx. kg
Auxillary switch blocks for snapping on the front for contactors						
Size S00 — For plugging onto the front side of the contactors with and without auxiliary switch blocks						
3RT29 16-1EH00	3RT2.1	Varistors	24 … 48 AC	24 … 70 DC	**3RT29 16-1BB00**	0.010
			48 … 127 AC	70 … 150 DC	**3RT29 16-1BC00**	0.010
	3RT2.1	RC elements	24 … 48 AC	24 … 70 DC	**3RT29 16-1CB00**	0.010
			48 … 127 AC	70 … 150 DC	**3RT29 16-1CC00**	0.010
	3RT2.1	Noise suppression		12 … 250 DC	**3RT29 16-1DG00**	0.010
	3RT2.1	Diode assemblies (diode and Zener diode) for DC operation and short break times		12 … 250 DC	**3RT29 16-1EH00**	0.010
Size S0 — For plugging onto the front side of the contacctors (prior to mounting of the auxiliary switch block)						
3RT29 26-1BB00	3RT2.2	Varistors	24 … 48 AC	24 … 70 DC	**3RT29 26-1BB00**	0.010
			48 … 127 AC	70 … 150 DC	**3RT29 26-1BC00**	0.010
	3RT2.2	RC elements	24 … 48 AC	24 … 70 DC	**3RT29 26-1CB00**	0.010
			48 … 127 AC	70 … 150 DC	**3RT29 26-1CC00**	0.010
	3RT2.2	Diode assemblies for DC operation and short break times		24 DC	**3RT29 26-1ER00**	0.010
				30 … 250 DC	**3RT29 26-1ES00**	0.010
Sizes S2						
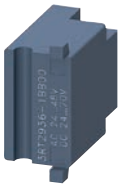 3RT2936-1B.00	3RT2.3	Varistors	24 ... 48 AC	24 ... 70 DC	**3RT29 36-1BB00**	0.010
			127 ... 240 AC	150 ... 250 DC	**3RT29 36-1BD00**	0.010
			48 ... 127 AC	70 ... 150 DC	**3RT29 36-1BC00**	0.010
	3RT2.3	RC elements	24 ... 48 AC	24 ... 70 DC	**3RT29 36-1CB00**	0.010
			127 ... 240 AC	150 ... 250 DC	**3RT29 36-1CD00**	0.010
			48 ... 127 AC	70 ... 150 DC	**3RT29 36-1CC00**	0.010
3RT2936-1E.00	3RT2.3	Diode assemblies	--	24 DC	**3RT29 36-1ER00**	0.010
			--	30 ... 250 DC	**3RT29 36-1ES00**	0.010
Sizes S3						
3RT2936-1CC00	3RT20 4.	Varistors	24 … 48 AC	24 … 70 DC	**3RT29 36-1BB00**	0.025
			48 … 127 AC	70 … 150 DC	**3RT29 36-1BC00**	0.025
	3RT20 4.	RC elements	24 … 48 AC	24 … 70 DC	**3RT29 36-1CB00**	0.040
			48 … 127 AC	70 … 150 DC	**3RT29 36-1CC00**	0.040
	3RT20 4.	Diode assemblies for DC operation and short break times, can be plugged in at bottom		24 DC	**3RT29 36-1ER00**	0.025
				30 … 250 DC	**3RT29 36-1ES00**	0.025

For additional surge suppression, see page 2/80

Selection and ordering data

Auxillary switch blocks for snapping on the front for contactors

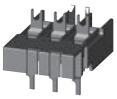
3RA29 11-2AA00

	For MSP Size	For contactors	Actuating voltage of contactor	Screw Terminals Order No.	Pack Qty.	Weight approx. kg
Electrical and mechanical link between motor starter protector and contactor						
Single-unit packaging	S00, S0	S00	AC and DC	**3RA19 21-1DA00**		
	S00, S0	S0	AC	**3RA29 21-1AA00**	1 unit	0.055
	S00, S0	S0	DC	**3RA29 21-1BA00**	1 unit	0.068
	S2	S2	AC and DC	**3RA29 31-1AA00**	1 unit	0.104
	S3	S3	AC and DC	**3RA19 41-1AA00**	1 unit	0.090
Multi-unit packaging	S00, S0	S00	AC and DC	**3RA19 21-1D**	10 unit	0.021
	S00, S0	S0	AC	**3RA29 21-1A**	10 unit	0.001
	S00, S0	S0	DC	**3RA29 21-1B**	10 unit	0.001
	S2	S2	AC and DC	**3RA29 31-1A**	5 unit	0.104
	S3	S3	AC and DC	**3RA19 41-1A**	5 unit	0.073

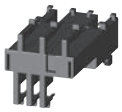
3RA29 11-2AA00

				Spring-type Terminals Order No.		
Electrical and mechanical link between motor starter protector and contactor						
Single-unit packaging	S00	S00	AC and DC	**3RA29 11-2AA00**		
	S0	S0	AC[1] and DC	**3RA29 21-2AA00**	1 unit	0.040
Multi-unit packaging	S00	S00	AC and DC	**3RA29 11-2A**	10 unit	0.400
	S0	S0	AC[1] and DC	**3RA29 21-2A**	10 unit	0.770

Hybrid link modules from motor starter protector to contactor

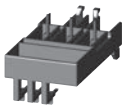
3RA29 11-2FA00

For mechanical and electrical connection between motor starter protector with screw terminals and contactor with spring-type terminals						
Single-unit packaging	S00	S00	AC and DC	**3RA29 11-2FA00**	1 unit	0.029
	S0	S0	AC[1] and DC	**3RA29 21-2FA00**	1 unit	0.056
Multi-unit packaging	S00	S00	AC and DC	**3RA29 11-2F**	10 unit	0.290
	S0	S0	AC[1] and DC	**3RA29 21-2F**	10 unit	0.560

Link modules from motor starter protector to soft starters

	For MSPs Size	For soft starters Size	Screw Terminals Order No.	Pack Qty.	Weight approx. kg
Electrical and mechanical link between motor starter protector and soft starter					
Single-unit packaging	S00/S0	S00/S0	**3RA29 21-1BA00**	1 unit	0.001
Multi-unit packaging	S00/S0	S00/S0	**3RA29 21-1B**	10 unit	0.001

3RA29 11-2GA00

			Spring-type Terminals Order No.		
Electrical and mechanical link between motor starter protector and soft starter					
Single-unit packaging	S00	S00	**3RA29 11-2GA00**	1 unit	0.038
	S0	S0	**3RA29 21-2GA00**	1 unit	0.072
Multi-unit packaging	S00	S00	**3RA29 11-2G**	10 unit	0.380
	S0	S0	**3RA29 21-2G**	10 unit	0.720

[1] A spacer for height compensation on AC contactors with spring-type terminals, size S0 is optionally available, see page 4/51.

3RA2 Accessories

Mounting kits for Fast Bus

Accessories

	For Conductors Size	Version	Screw Terminals Order No.	Pack Qty.	Weight approx. kg
Wiring kits for contactors					
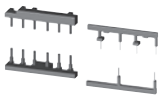 3RA29 23-2AA1	**Reversing**				
	S00	Electrical and mechanical connection for reversing contactors, optionally with integrated electrical and mechanical interlock	**3RA29 13-2AA1**	1 unit	0.001
	S0		**3RA29 23-2AA1**	1 unit	0.001
	S2	The kit contains: 2 connecting pins for 2 contactors, wiring modules on the top and bottom • for main and auxiliary circuits	**3RA29 33-2AA1**	1 unit	0.120
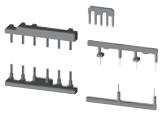 3RA29 23-2BB1	**Wye-delta starting**				
	S00	Electrical and mechanical link for three contactors of same size	**3RA29 13-2BB1**	1 unit	0.001
	S0		**3RA29 23-2BB1**	1 unit	0.001
	S2-S2-S0		**3RA29 33-2C**	1 unit	0.070
	S2-S2-S2		**29RA2933-2BB1**	1 unit	0.160
			Spring-type Terminals		
3RA29 23-2AA2	**Reversing Duty**				
	S00	Electrical and mechanical connection for reversing contactors, optionally with integrated electrical and mechanical interlock	**3RA29 13-2AA2**	1 unit	0.001
	S0		**3RA29 23-2AA2**	1 unit	0.001
	S2	The kit contains: 2 connecting pins for 2 contactors, wiring modules on the top and bottom • for main circuits only	**3RA29 33-2AA2**	1 unit	0.001
	Wye-delta starting				
	S00	Electrical and mechanical link for three contactors of same size	**3RA29 13-2BB2**	1 unit	0.001
	S0		**3RA29 23-2BB2**	1 unit	0.001
	S2-S2-S0		**3RA29 33-2C**	1 unit	0.001
	S2-S2-S2		**3RA29 33-2BB2**	1 unit	0.001
			Screw Terminals		
Wiring kits for contactors					
3RA29 16-1A	**Reversing**				
	S00	Switches 2 contactors in series	**3RA29 16-1A**	1 unit	0.001
	S0		**3RA29 26-1A**	1 unit	0.001
	S2		**3RA29 36-1A**	1 unit	0.001

3RA2 Accessories

Mounting kits for Fast Bus

Accessories

	For Conductors Size	For MSPs Size	Version	Screw Terminals Order No.	Pack Qty.	Weight approx. kg
Mechanical interlocks						
3RA29 34-2B	S2/S3	--	For reversing contactors, laterally mounted, no electrical connections (each contactor has 1NO/1NC auxiliaries)	**3RA29 34-2B**		0.010
Terminals for contactor coil						
3RA19 23-3B	S3	--	For A1 and A2 of reversing contactors (includes 2 x A1 and 1 x A2)	**3RA19 23-3B**		0.020
Standard mounting rail adapters						
3RA29 22-1AA00	For mechanical fixing of motor start protector and contactor; for snapping onto standard mounting rail or for screw fixing.					
	S00, S0	S00, S0	Single-unit packaging	**3RA29 22-1AA00**	1 unit	0.001
	S2	S2		**3RA19 31-1AA00**	1 unit	0.020
	S3	S3		**3RA19 41-1AA00**	1 unit	0.250
	S00, S0	S00, S0	Multi-unit packaging	**3RA29 22-1A**	5 units	0.001
Side modules for standard mounting rail adaptors						
3RA19 02-1B	S00 ...S3	S00 ...S3	For standard mountin rail adaptors 10 mm wide, 96 mm long, for widening standard mounting rail adaptors when using lateral auxiliary switches, For size S00 to S2: 2 units required. For size S3: 3 units required	**3RA19 02-1B**	10 units	0.009
RH assembly kits for reversing duty and standard rail mounting						
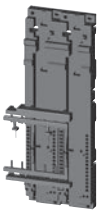 3RA29 23-1BB1	RH assembly kits for screw terminals					
	S0	S0	Comprising: • Wiring kits • 2 standard mounting rail adaptors • 2 connecting wedges Link modules may be ordered seperately.	**3RA29 23-1BB1**	1 unit	0.001
	S2	S2		**3RA29 33-1BB1**	1 unit	0.560
	S3	S3		**3RA29 43-1BB1**	1 unit	0.810
	RH assembly kits for spring-type terminals			Spring-type Terminals		
	S0	S0	Comprising: • Wiring kits • 2 standard mounting rail adaptors • 2 connecting wedges • Spacers Link modules may be ordered seperately.	**3RA29 23-1BB2**	1 unit	0.001

3RA2 Accessories

Busbar adapters

	For motor starter protector	For contactors	Version	Order No.	Std. pack qty.	Weight approx.
	Size	Size				kg
Busbar adapters for 60 mm systems						
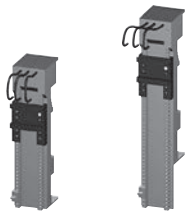 8US12 51-5DS10 8US12 51-5DT11	For flat copper profiles according to DIN 46433 Width: 12 mm and 30 mm Thickness: 5 mm and 10 mm also for T and double-T special profiles					
	For motor starter protectors and contactors with screw terminals			**Screw terminals**		
	S00	S00	Rated current 16 A, 45 mm wide, 200 mm long	**8US12 51-5DS10**	1 unit	0.183
	S0	S0	Rated current 32 A, 45 mm wide, 260 mm long	**8US12 51-5NT10**	1 unit	0.183
	S2	S2	Up to 65A, 55mm wide, 260mm long	**8US12 61-6MT10**	1 unit	0.572
	For motor starter protectors and contactors with spring-type terminals			**Spring-type terminals**		
	S00	S00	Rated current 16 A, 45 mm wide, 260 mm long	**8US12 51-5DT11**	1 unit	0.183
	S0	S0	Rated current 32 A, 45 mm wide, 260 mm long	**8US12 51-5NT11**	1 unit	0.183
Device holders for lateral mounting onto busbar adapters for 60 mm system						
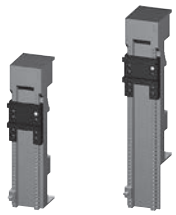 8US12 50-5AS10 8US12 50-5AT10	S00, S0	S00, S0	Up to 25 A, 45 mm wide, 200 mm long	**8US12 50-5AS10**	1 unit	0.183
	S0	S0	Up to 40 A, 45 mm wide, 260 mm long	**8US12 50-5AT10**	1 unit	0.183
	S2	S2	Up to 65A, 118mm wide, 260mm long (includes 8US1261-6MT10 adapter)	**8US12 11-6MT10**	1 unit	0.873
Side modules for widening busbar adapters						
	--	--	Including connecting wedges, for widening busbar adapters or device holders, 9 mm wide, 200 mm long	**8US19 98-2BJ10**	1 unit	0.023
Spacers for fixing the motor starter onto the busbar adapter						
	--	S00, S0	(1 pack = 100 units)	**8US19 98-1BA10**	1 pack	0.183
Vibration and shock kits for high vibration and shock loads						
	--	S00, S0		**8US19 98-1CA10**	1 unit	0.183
RS assembly kits for reversing duty for 60 mm busbar systems						
3RA29 23-1DB1 only Busbar adapter pictured	**RS assembly kits for screw terminals**			**Screw terminals**		
	S00, S0 S0 S00 S2	S00 S0 S0 S2	Comprising: • Wiring kits • Busbar adapters • Device holders • 2 connecting wedges • Side modules Link modules must be ordered separately.	**3RA29 13-1DB1** **3RA29 23-1DB1** **3RA29 23-1EB1** **3RA29 33-1DB1**	1 unit 1 unit 1 unit 1 unit	0.001 0.001 0.001 1.235
3RA29 23-1DB2 only Busbar adapter pictured	**RS assembly kits for spring-type terminals**			**Spring-type terminals**		
	S00 S0	S00 S0	Comprising: • Wiring kits • Busbar adapters • Device holders • 2 connecting wedges • Spacers • Side modules Link modules must be ordered separately.	**3RA29 13-1DB2** **3RA29 23-1DB2**	1 unit 1 unit	0.001 0.001

Connecting wedges, spaces, and tools

	For motor starter protector Size	For contactors Size	Version	Order No.	Std. pack qty.	Weight approx. kg
Connecting wedges						
8US19 98-1AA00	For mechanical linking of busbar adapters and device holders or of standard mounting rail adapters (2 units per combination required)			**8US19 98-1AA00**	100 units	0.100
Spacers						
3RA29 11-1CA00	For height compensation on AC contactors size S0 with spring-type terminals			**Spring-type terminals**		
	S0	S0	**Single-unit packaging**	**3RA29 11-1CA00**	1 unit	0.001
	S0	S0	**Multi-unit packaging**	**3RA29 11-1C**	5 units	0.001

	Version	Order No.	Std. pack qty.	Weight approx. kg
Tools for opening spring-type terminals by hand				
3RA29 08-1A	**Screwdrivers** for all SIRIUS devices with spring-type terminals Length approx. 200 mm, 3.0 mm x 0.5 mm, titanium gray/black, partially insulated	**Spring-type terminals** **3RA29 08-1A**	1 unit	0.045
Blank labels				
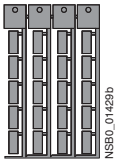 3RT19 00-1SB20	**Unit labeling plates**[1] for SIRIUS devices 20 mm x 7 mm, pastel turquoise	**3RT29 00-1SB20**	340 units	0.200

[1] PC labeling system for individual inscription of unit labeling plates available from: murrplastik Systems, Inc. www.murrplastik.com .

Selection and ordering data

	For MSPs Size	For Conductors Size	Version	Order No.	Std. Pack Qty.	Weight approx. kg
Push-in lugs for screw fixing						
3RV29 28-0B	S00	--	For screwing the motor starter protector onto mounting plates; for each motor starter protector, 2 units are required.	**3RV29 28-0B**	10 units	0.100

Components for IEC types of coordination 1 and 2 at AC 500 V

Technical data

Three-phase standard motor[1]) 4-pole at AC 500 V		Setting range Inverse-time delayed overload release	Motor starter protector	Contactor[2])	Size
Standard output	Motor current (guide value)		Type	Type	
P	*I*				
kW	A	A			
IEC Type of coordination 1 at I_q = 50 kA/AC 400 V Normal starting Class 10					
1.5	3.6	3.5 ... 5	3RV20 11-1FA10	3RT20 15-1AP00	**S00**
2.2	4.9	4.5 ... 6.3	3RV20 11-1GA10		
3	6.5	5.5 ... 8	3RV20 11-1HA10		
4	8.5	7 ... 10	3RV20 11-1JA10	3RT20 16-1AP01	
5.5	11.5	9 ... 12.5	3RV20 11-1KA10	3RT20 17-1AP01	
7.5	15.5	11 ... 16	3RV20 11-4AA10	3RT20 18-1AP01	
IEC Type of coordination 2 at I_q = 50 kA/AC 400 V Normal starting Class 10					
0.06	0.2	0.14 ... 0.2	3RV20 11-0BA10	3RT20 15-1AP01	**S00**
0.06	0.2	0.18 ... 0.25	3RV20 11-0CA10		
0.09	0.3	0.22 ... 0.32	3RV20 11-0DA10		
0.09	0.3	0.28 ... 0.4	3RV20 11-0EA10		
0.12	0.4	0.35 ... 0.5	3RV20 11-0FA10		
0.18	0.6	0.45 ... 0.63	3RV20 11-0GA10		
0.18	0.6	0.55 ... 0.8	3RV20 11-0HA10		
0.25	0.85	0.7 ... 1	3RV20 11-0JA10		
0.37	1.1	0.9 ... 1.25	3RV20 11-0KA10		
0.55	1.5	1.1 ... 1.6	3RV20 11-0AA10		
0.75	1.9	1.4 ... 2	3RV20 11-1BA10		
0.75	1.9	1.8 ... 2.5	3RV20 11-1CA10		
1.1	2.7	2.2 ... 3.2	3RV20 11-1DA10		
1.5	3.6	2.8 ... 4	3RV20 11-1EA10		
1.5	3.6	3.5 ... 5	3RV20 11-1FA10	3RT20 24-1AP01	**S0**
2.2	4.9	4.5 ... 6.3	3RV20 11-1GA10		
3	6.5	5.5 ... 8	3RV20 11-1HA10		
4	8.5	7 ... 10	3RV20 11-1JA10		
5.5	11.5	9 ... 12.5	3RV20 11-1KA10		
7.5	15.5	11 ... 16	3RV20 21-4AA10	3RT20 26-1AP01	
7.5	15.5	14 ... 20	3RV20 21-4BA10		
11	22	17 ... 22	3RV20 21-4CA10	3RT20 27-1AP01	
11	22	20 ... 35	3RV20 21-4DA10		
15	29	27 ... 32	3RV20 21-4EA10		

1) Selection depends on the actual startup and rated data of the protected motor.

2) Rated control supply voltage 120 V AC. Other voltages are possible.

Components for IEC types of coordination 1 and 2 at AC 500 V

Technical data

Three-phase standard motor[1]) 4-pole at AC 500 V		Setting range Inverse-time delayed overload release	Motor starter protector	Contactor[2])	Size
Standard output	Motor current (guide value)		Type	Type	
P	*I*				
kW	A	A			
IEC Type of coordination 1 at I_q = 50 kA/AC 500 V Normal starting Class 10					
On request			3RV2031-4DA10	3RT20 35-1AK60	**S2**
On request			3RV2031-4EA10	3RT20 35-1AK60	
On request			3RV2031-4FA10	3RT20 35-1AK60	
On request			3RV2031-4GA10	3RT20 36-1AK60	
On request			3RV2031-4HA10	3RT20 36-1AK60	
On request			3RV2041-4JA10	3RT20 45-1AK60	**S3**
On request			3RV2041-4KA10	3RT20 45-1AK60	
On request			3RV2041-4LA10	3RT20 46-1AK60	
IEC Type of coordination 2 at I_q = 50 kA/AC 500 V Normal starting Class 10					
On request			3RV20 31-4AA10	3RT20 35-1AK60	**S2**
On request			3RV20 31-4BA10	3RT20 35-1AK60	
On request			3RV20 31-4DA10	3RT20 35-1AK60	
On request			3RV20 31-4EA10	3RT20 35-1AK60	
On request			3RV20 31-4FA10	3RT20 35-1AK60	
On request			3RV20 31-4GA10	3RT20 36-1AK60	
On request			3RV20 31-4HA10	3RT20 36-1AK60	
On request			3RV20 31-4JA10	3RT20 45-1AK60	**S3**
On request			3RV20 31-4KA10	3RT20 45-1AK60	
On request			3RV20 31-4LA10	3RT20 46-1AK60	

1) Selection depends on the actual startup and rated data of the protected motor.

2) Rated control supply voltage 120 V AC. Other voltages are possible.

Components for IEC types of coordination 1 and 2 at AC 690 V

Technical data

Three-phase standard motor 4-pole at AC 690 V[3]) Standard output	Motor current (guide value)	Setting range MSP	Standard IEC circuit-breaker with limiting function Type	Subsequent MSP Type	Contactor[1]) Type	Size	Short-circuit switching capacity I_q at 690 V
P	*I*						
kW	A	A					kA
IEC Types of coordination 1 and 2 at AC 690 V Normal starting Class 10							
On request		11 ... 16	3RV13 31-4HC10 Size S2 I_n= 50 A	3RV20 31-4AA10	3RT20 35-1AK60	**S2**	50
On request		14 ... 20		3RV20 31-4BA10	3RT20 35-1AK60		
On request		18 ... 25		3RV20 31-4DA10	3RT20 35-1AK60		
On request		22 ... 32		3RV20 31-4EA10	3RT20 35-1AK60		
On request		28 ... 40		3RV20 31-4FA10	3RT20 45-1AK60[2])	**S2/S3**	50
On request		36 ... 45		3RV20 31-4GA10	3RT20 45-1AK60[2])		
On request		40 ... 50		3RV20 31-4HA10	3RT20 46-1AK60[2])		

Installation guidelines for AC 400/500 V

The following distances from earthed components must be observed when installing combinations:

Motor starter protectors in combination with contactors MSP	Contactor	Rated operational voltage	Distances from earthed or live parts Y mm	X2[4]) mm	Z mm
3RV2. 1 with	3RT20 1	400/500 V	20	10	9
3RV2. 2 with	3RT20 1	400/500 V	30	10	9
	3RT2 . 2	400/500 V	30	10	9
	3RT2 . 3	400/500 V	30	10	9
3RV2. 3 with	3RT20 2	400/500 V	50	10	10
	3RT2 . 3	400/500 V	50	10	10
	3RT20 4	400/500 V	50	10	10
3RV2. 4 with	3RT20 4	400 V	90	10	12
	3RT20 4	500 V	220	10	20

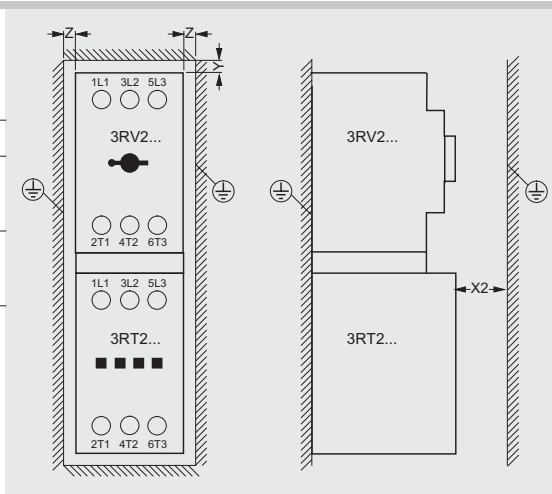

- No upstream circuit-breaker required; short-circuit proof up to 100 kA.

1) Rated control supply voltage 120 V AC. Other voltages are possible.
2) With these combinations, the distance between the subsequent MSP and the contactor must be at least 10 cm.
3) Selection depends on the specific startup and rated data of the protected motor.
4) Minimum distance to contactor at front. For the MSP, no minimum distance at the front must be maintained.

Technical data

Installation guidelines for AC 690 V

Size	Mounting method
S0	Mounting on an insulated base plate. If screws are used for fixing, the screws must not be earthed. Alternatively, the standard rail adapter can be used for all units.
S2/S3	Mounting on an insulated base plate. Alternatively, the standard rail adapter can also be used without restriction.

Standard surface mounting for sizes S0 up to 5.5 kW, S2 and S3

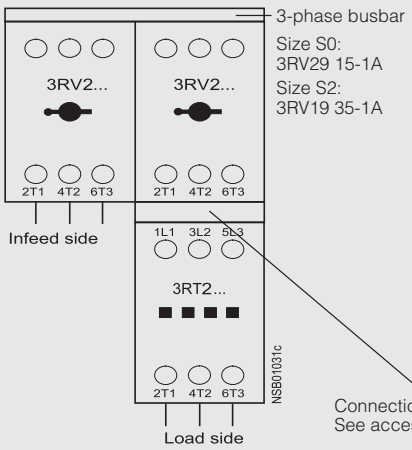

Surface mounting for sizes S0 from 7.5 to 11 kW

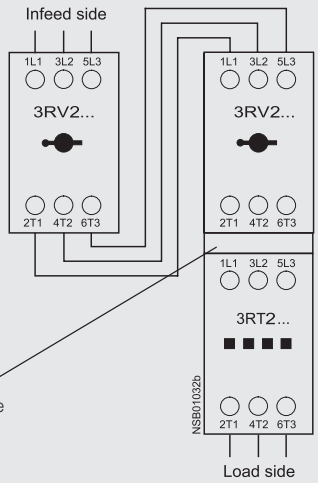

The following distances from earthed components must be observed when installing combinations:

Two MSPs in combination with contactors			Distances from earthed or live components					
MSP	Contactor	Rated operational voltage	Y1 mm	Y2 mm	Y3 mm	X1 mm	X2 mm	Z mm
3RV2. 2 with	3RT20 2	690 V	80	10	95	20	14	20
3RV2. 3 with	3RT20 3 3RT20 4	690 V 690 V	50 50	10 10	120 120	10 10	32 40	10 10

a 3-phase busbar:
Size S0: 3RV29 15-1A
Size S2: 3RV19 35-1A

b In combination with size S2 MSPs and size S3 contactors, a spacing of 100 mm must be maintained.

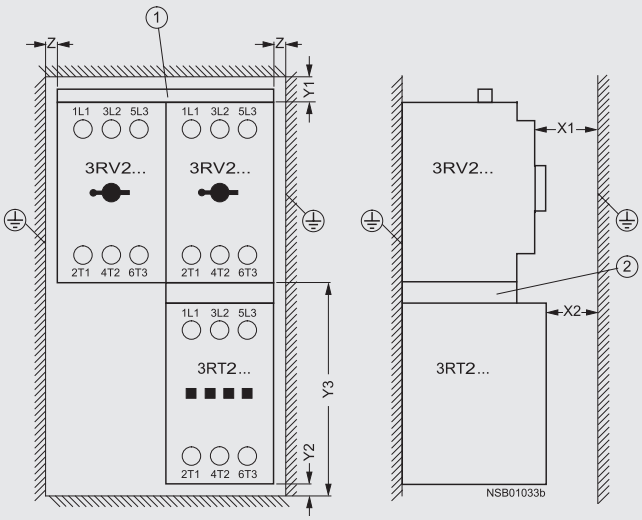

Technical data

General data

Specifications			IEC 60 947-1, EN 60 947-1 (VDE 0660 Part 100) IEC 60 947-2, EN 60 947-2 (VDE 0660 Part 101) IEC 60 947-4-1, EN 60 947-4-1 (VDE 0660 Part 102)			
Type Size Number of poles			**3RA2. 1** **S00** 3	**3RA2. 2** **S0** 3	**3RA2. 3** **S2** 3	**3RA2.4** **S3** 3
Max. rated current I_{nmax} (= max. rated operational current I_e)		A	16	32	65	100
Permissible ambient temperature	°C for storage/transport °C for operation		–55 ... +80 –20 ... +60 (restrictions apply at more than +60 °C)		–50 ... +80 –20 ... +60	
Rated operational voltage U_e **Rated frequency** **Rated insulation voltage U_i** **Rated impulse withstand voltage U_{imp}**		V Hz V kV	690 50/60 690 6			
Release class (CLASS)	acc. to IEC 60 947-4-1, EN 60 947-4-1 (VDE 0660 Part 102)		10			
Rated fused short-circuit current I_q at 50/60 Hz AC 400 V acc. to IEC 60 947-4-1, DIN EN 60 947-4-1 (VDE 0660 Part 102) **Types of coordination to IEC 60 947-4-1, EN 60 947-4-1 (VDE 0660 Part 102)**		kA	150 1)		100	50
Power losses $P_{v\,max}$ of all main conducting paths depending on the rated current I_n (upper current setting range)	• Up to 1.25 A • 1.6 - 6.3 A • 8 - 12 A • 16 A • 5 - 6.3 A • 8 - 12 A • 16 - 32 A • 25 - 32 A • 40 A • 45 - 50 A • 63 A • 75 - 90 A • 100 A	W W W W W W W W W W W W W	2 2.3 3.5 4.3	 2.3 3.5 4.3	 16.2 17.2 21	 29 45 60
Power consumption of solenoid coils (with cold coil and U_s, 50 Hz)						
• AC operation	closing p.f. closed p.f.	VA VA 	27 0.8 4.2 0.25	65 0.82 8.5 0.25	190 0.72 16 0.37	270 0.68 22 0.27
• DC operation	closing = closed	W	4	5.9	–	15
Coil voltage tolerance for contactors			0.8 - 1.1 x U_s			
low limit	at 55 °C at 60 °C		0.8 x U_s 0.85 x U_s	– –		
Endurance of MSP						
• Mechanical endurance		operating cycles	100 000		Up to 52A: 50 000	50 000
• Electrical endurance		operating cycles	100 000		from 65A: On request	50 000
• Max. switching frequency per hour (motor starts)		1/h	15		15	15
Endurance of contactor						
• Mechanical endurance		operating cycles	30 million	10 million		
• Electrical endurance		operating cycles	See endurance curves of contactors in Part 3.			
Shock resistance (sine-wave pulse)	acc. to IEC 60 068 Part 2-27	g	up to 6	up to 6	up to 6	up to 6
Touch protection on the front	acc. to IEC 60529		IP 20		IP 20	
Shock-hazard protection	acc. to DIN VDE 0106 Part 100		Finger-safe			
Phase failure sensitivity of MSP	acc. to IEC 60 947-4-1, EN 60 947-4-1 (VDE 0660 Part 102)		Yes			
Isolating characteristics of MSP **Main and EMERGENCY-STOP switch characteristics of MSP and accessories**	acc. to IEC 60 947-2, EN 60 947-2 (VDE 0660 Part 101) acc. to IEC 60 204-1, EN 60 204-1 (VDE 0113 Part 1)		Yes Yes (with overvoltage releases of category 1 under conditions of proper use)			
Safe isolation between main and auxiliary circuits	acc. to DIN VDE 0160 Part 101		up to 400 V			
Positively driven operation at contactors			Yes	Yes, from main contact to auxiliary NC contact		

1) See selection and ordering data on pages 4/36 to 4/43.

Technical data

Conductor cross-sections of main circuit

Specifications		IEC 60 947-1, EN 60 947-1 (VDE 0660 Part 100) IEC 60 947-2, EN 60 947-2 (VDE 0660 Part 101) IEC 60 947-4-1, EN 60 947-4-1 (VDE 0660 Part 102)			
Type Size Number of poles		**3RA2. 1** **S00** 3	**3RA2. 2** **S0** 3	**3RA2.3** **S2** 3	**3RA21 4** **S3** 3
Connection type **Terminal screw**		Screw terminal M3 Posidrive size 2	Screw terminal M3 Posidrive size 2	Screw Terminals M6 Pozidriv size 2	Box terminals Allen screw
Conductor cross-sections (min./max) 1 or 2 conductors can be connected					
• Solid and stranded	mm² mm² mm²	2 x (0.5 … 1.5)[2] only for contactors 2 x (0.75 … 2.5)[2] max. 2 x 4		2 x (1 ... 25)[2] 1 x (1 ... 35)[2] 2 x (1 ... 35)[2] 1 x (1 ... 50)[2]	
• Finely stranded without end sleeve	mm²	–			
• Finely stranded with end sleeves (DIN 46 228 T1)	mm²	2 x (0.5 ... 1.5)[2] 2 x (0.75 ... 2.5)[2]		2 x (1 ... 16)[2] 1 x (1 ... 25)[2] 2 x (1 ... 25)[2] 1 x (1 ... 35)[2]	
• AWG cables, solid or stranded	AWG AWG AWG	2 x (20 ... 16)[2] 2 x (18 ... 14) 2 x 12		2 x (18 ... 3)[2] 1 x (18 ... 2)[2] 2 x (18 ... 2)[2] 1 x (18 ... 1)[2]	
Minimum/maximum conductor cross-sections					
• flexible with ferrule					
- 1 conductor	mm²			0.75/25	2.5/50[1]
- 2 conductors	mm²			0.75/16	2.5/35[1]
• solid or stranded					
- 1 conductor	mm²			0.75/35	2.5/70[1]
- 2 conductors	mm²			0.75/25	2.5/50[1]
Ribbon cable				yes	yes
Bus connection				–	yes
• solid or stranded	AWG			2 x (30 ... 2)	–
• stranded	AWG			–	2 x (10 ... 1/0)
Connection type		Spring Loaded connection			
• Solid and stranded	mm²	2 x (0.5 ... 2.5)	–	2 x (0.5 … 2.5)	
• Finely stranded without end sleeve	mm²			2 x (0.5 … 2.5)	
• Finely stranded with end sleeves	mm²			2 x (0.5 … 2.5)	
• AWG cables, solid or stranded	AWG	2 x (20 ... 12)		2 x (20 … 14)	
Permissible mounting position		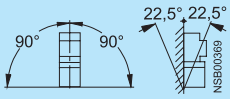 Attention: acc. to DIN 43 602 Start command **"I"** right-hand or above			

1) Cable-lug and busbar connection possible after removing the box terminals.

2) If two different conductor cross-sections are connected to one clamping point, both cross-sections must lie in the range specified. If identical cross-sections are used, this restriction does not apply.

3RA2 – up to 100 A

Overview

The 3RA combination starters consist of the 3RV MSP and the 3RT contactor. MSP and contactor are prewired and mechanically connected with preassembled kits (link modules, connection assembly kits and mounting rail or busbar adapters).

As the 3RA combination starters are constructed from 3RV MSPs and 3RT contactors, the same accessories can be used for the combination starter as for these MSPs and contactors.

Pre-assembled link modules are available as accessories for the power spectrum up to 75 HP. The desired combination starter can thus be assembled quickly and economically by the customer. A time saving is also achieved with the link modules as – unlike with conventional wiring systems – there is no need to rectify possible wiring errors.

As a combination starter rated for tap conductor protection for group installation the 3RV MSP is responsible for overload and short-circuit protection in the motor circuit. Back-up protective devices, such as fuses or SIEMENS Sentron circuit breakers are required as per NEC 430-53 guidelines for group installations for multiple motor applications

The 3RT contactor is ideal for extremely complex switching tasks requiring durable components.

The permissible ambient temperature is 60 °C with butt-mounting and without derating (70 °C possible subject to certain restrictions).

3RA combination starters are available for motors up to 75 Hp at 460 V AC and setting ranges from 0.14 A to 100 A.

3RA combination starters are supplied in four different sizes:

Size	Overall width mm	Max. rated current $I_{n\,max}$ A	For three-phase motors up to HP
S00	45	8	5
S0	45	22	15
S2	55	50	40
S3	70	100	75

Operating conditions

3RA combination starters are climate-proof. They are intended for use in enclosed rooms in which no severe conditions (such as dust, caustic vapors, hazardous gases) prevail. Suitable enclosures must be provided for installation in dusty and damp locations.

Accessories

The accessories for the special equipment, such as auxiliary contacts and undervoltage trips, can also be used for the 3RA combination starters.

In addition, certain accessories have been optimized for the combination starters. They include the top-connected, transverse auxiliary contact on the MSP with one changeover contact or one NO contact + one NC contact. Special auxiliary contact blocks that can be snapped on from below are available for the contactor. These two accessories enable the combination starters to be wired easily without having to route cables via the equipment.

The special accessories for 3RA combination starters take the form of link modules for 3RV MSPs and 3RT contactors.

Technical data

For technical data, see pages 4/56-4/58. Additional details are contained in the respective tables for the 3RV MSPs and 3RT contactors.

Configuration

Overload tripping times

All the 3RA combination starters described here are designed for normal starting, in other words for overload tripping times of less than 10 s (CLASS 10). At rated-load operating temperature the tripping times are shorter, depending on the particular equipment and the setting range. The exact values can be derived from the tripping characteristics of the MSPs.

Classification types

DIN VDE 0660 Part 102 and IEC 60 947-4-1 make a distinction between two different types of coordination (types 1 and 2). Any short-circuits that occur are cleared safely by both types of coordination. The only differences concern the extent of the damage caused to the equipment by a short-circuit.

IEC Type of coordination 1

The combination starter may be non-operational after a short-circuit has been cleared. Damage to the contactor or to the overload relay is permissible. In 3RA load feeders, the MSP itself always achieves type of coordination 2.

IEC Type of coordination 2

There must be no damage to the overload trip or to any other components after a short-circuit has been cleared. The 3RA combination starter can resume operation without needing to be be renewed. At most, it is permissible to weld the contactor contacts if they can be disconnected easily without any significant deformation.

Mounting

Complete equipment

The 3RA combination starters can be ordered as complete equipment for direct starting or for reversing mode. Control supply voltages of 50 Hz AC 230 V or DC 24 V and assembly on a 35 mm standard mounting rail or in a 40 or 60 mm busbar system are possible.

Special equipment for customer assembly can be ordered if other rated control supply voltages are required. The link modules simplify customer assembly of the load feeders.

The corresponding distances from earthed or live parts, as detailed in the technical data, must be observed.

Customer assembly

The standard devices can be combined optimally in terms of both technical data and dimensions, thanks to the modular system of the SIRIUS series.

The combination starters can thus be assembled easily by the customer. It is simply necessary to assemble the standard 3RV MSP and 3RT contactor and the appropriate link module together.

For the order numbers for special equipment and link modules, see the selection and ordering data.

For the link modules for direct starting or reversing mode and assembly on a standard mounting rail or busbar, see accessories.

If a MSP with a rotary operating mechanism is required for the lower setting ranges up to 12 A, the S0 MSP can also be assembled with an S00 contactor. A special connecting module is available for this purpose.

For the installation of feeders, it is imperative to use standard rail adapters, as from size S2 for direct starting and as from size S0 for reversing, to ensure the necessary mechanical strength. A standard rail adapter is not necessary if a busbar adapter is used.

Assembly

3RA combination starters are available for assembly on standard mounting rails in accordance with EN 50 022-35 x 15 or on busbar adapters with a busbar centre-line spacing of 40 or 60 mm and a busbar thickness of 5 or 10 mm.

The combination starters are also suitable for screw fixing.

Size S00 and S0 can be screwed on with the aid of plug-in clips (see accessories on page 4/46).

3RA2 – up to 100 A

Direct-on-line starting • For standard rail mounting or screw fixing • Sizes S00 and S0

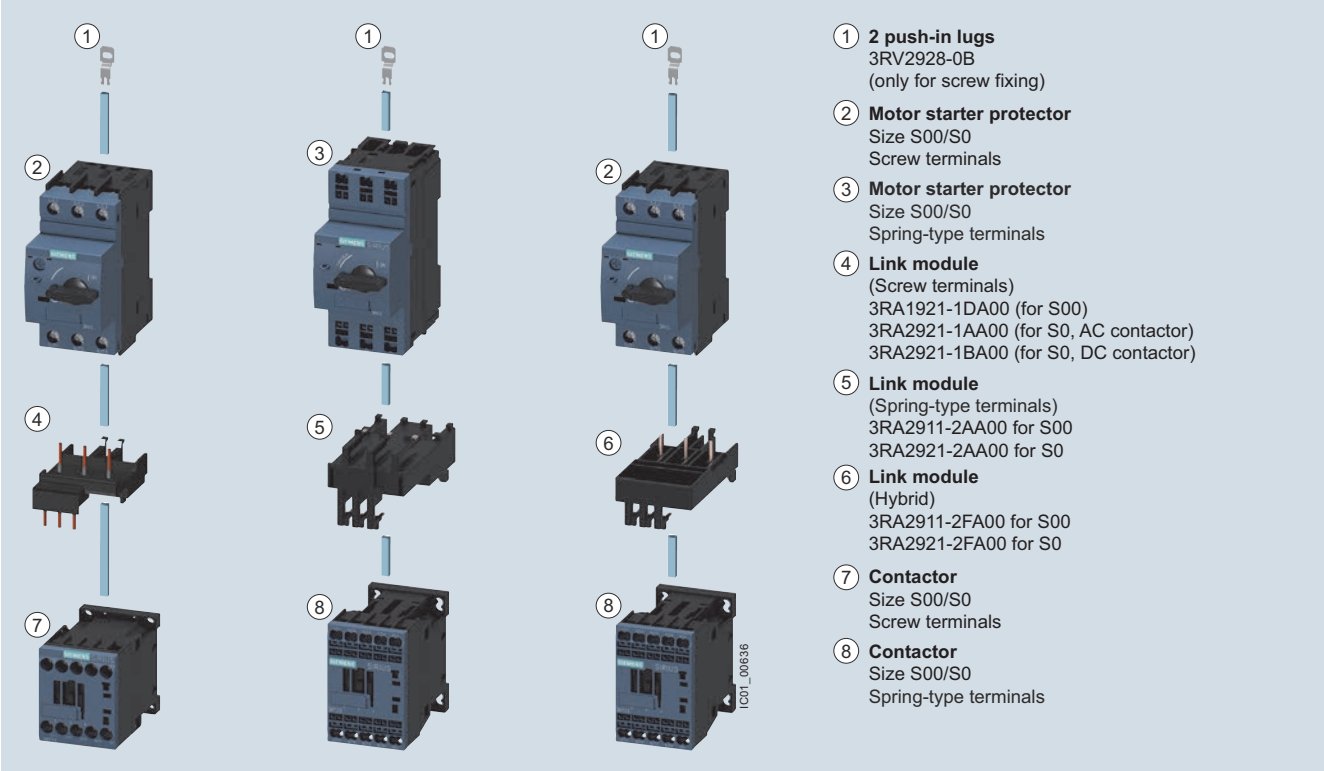

1. **2 push-in lugs**
   3RV2928-0B
   (only for screw fixing)
2. **Motor starter protector**
   Size S00/S0
   Screw terminals
3. **Motor starter protector**
   Size S00/S0
   Spring-type terminals
4. **Link module**
   (Screw terminals)
   3RA1921-1DA00 (for S00)
   3RA2921-1AA00 (for S0, AC contactor)
   3RA2921-1BA00 (for S0, DC contactor)
5. **Link module**
   (Spring-type terminals)
   3RA2911-2AA00 for S00
   3RA2921-2AA00 for S0
6. **Link module**
   (Hybrid)
   3RA2911-2FA00 for S00
   3RA2921-2FA00 for S0
7. **Contactor**
   Size S00/S0
   Screw terminals
8. **Contactor**
   Size S00/S0
   Spring-type terminals

Left: 3RA21 load feeder with screw terminals
Center: 3RA21 load feeder with spring-type terminals
Right: Motor starter protector combination with screw terminals, with contactor with spring-type terminals

Direct-on-line starting · For standard rail mounting · Up to Size S3

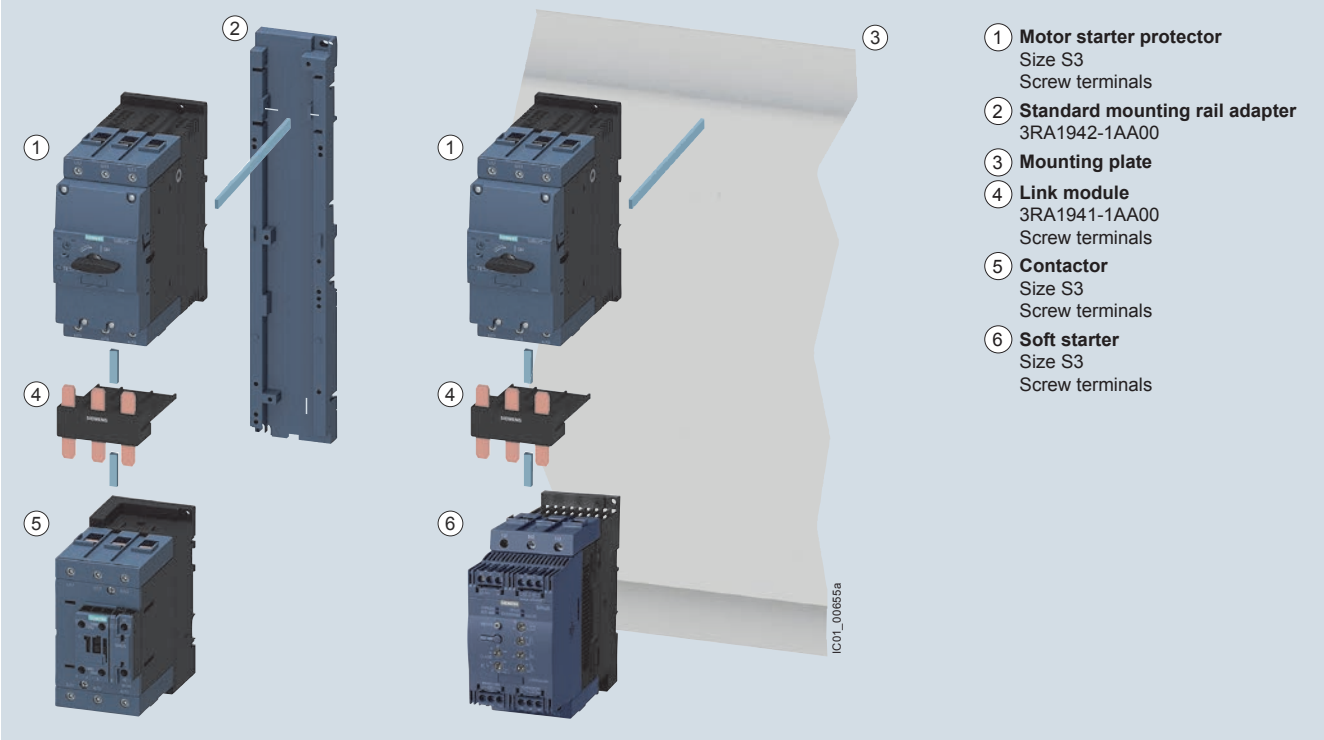

1. **Motor starter protector**
   Size S3
   Screw terminals
2. **Standard mounting rail adapter**
   3RA1942-1AA00
3. **Mounting plate**
4. **Link module**
   3RA1941-1AA00
   Screw terminals
5. **Contactor**
   Size S3
   Screw terminals
6. **Soft starter**
   Size S3
   Screw terminals

Load feeder for direct-on-line starting and standard rail mounting in size S3 (the version with screw terminals is shown in the picture)

3RA2 – up to 100 A

Direct-on-line starting · For 60 mm busbar systems · Sizes S00 and S0

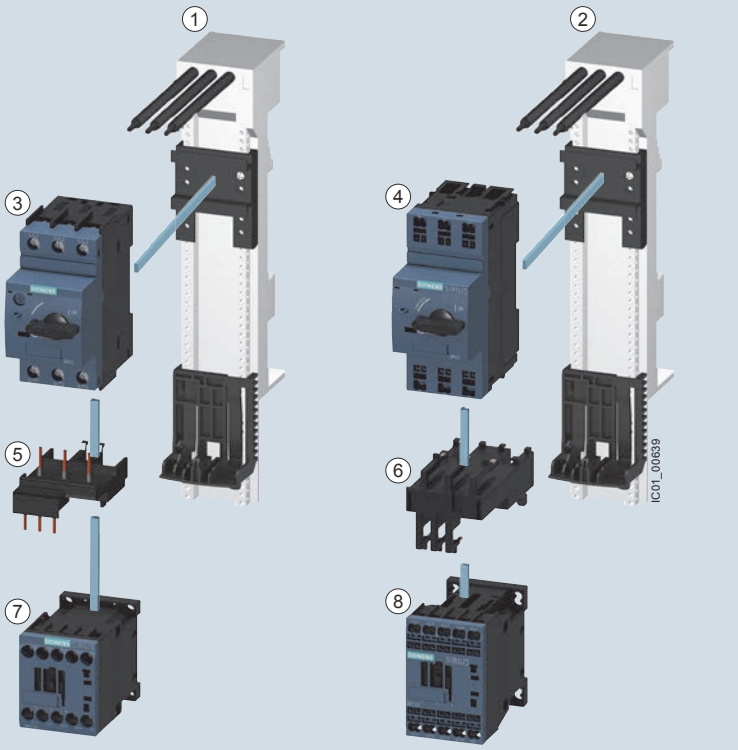

1. **60 mm busbar adapter for screw terminals**
   8US1251-5DS10 for S00
   8US1251-5NT10 for S0
2. **60 mm busbar adapter for spring-type terminals**
   8US1251-5DT11 for S00
   8US1251-5NT11 for S0
3. **Motor starter protector**
   Size S00/S0
   Screw terminals
4. **Motor starter protector**
   Size S00/S0
   Spring-type terminals
5. **Link module**
   Screw terminals
   3RA1921-1DA00 for S00
   3RA2921-1AA00 for S0, AC contactor
   3RA2921-1BA00 for S0, DC contactor
6. **Link module**
   3RA2911-2AA00 for S00
   3RA2921-2AA00 for S0
   (additional 3RA2911-1CA00 spacer for height compensation on AC contactors size S0 with spring-type terminals)
7. **Contactor**
   Size S00/S0
   Screw terminals
8. **Contactor**
   Size S00/S0
   Spring-type terminals

Left: 3RA21 load feeder for direct-on-line starting with busbar adapter with screw terminals
Right: 3RA21 load feeder for direct-on-line starting with busbar adapter with spring-type terminals

Direct-on-line starting · For 60 mm busbar systems · Size S2

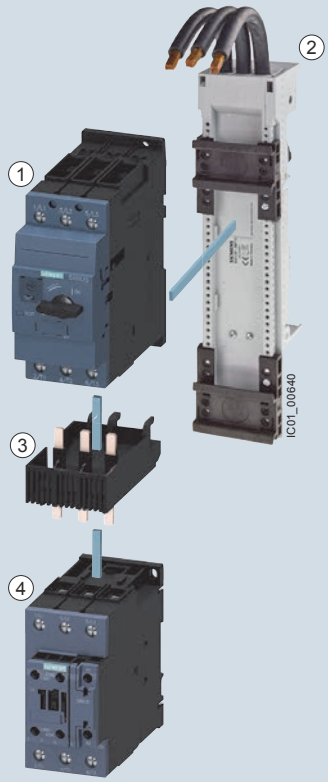

1. **Motor starter protector**
   Size S2
   Screw terminals
2. **Busbar adapter 60 mm**
   8US1261-6MT10
3. **Link module**
   3RA2931-1AA00
   Screw terminals
4. **Contactor**
   Size S2
   Screw terminals

3RA21 load feeder for direct-on-line starting with busbar adapter with screw terminals

3RA2 – up to 100 A

Reversing duty • For standard rail mounting or screw fixing • Size S00

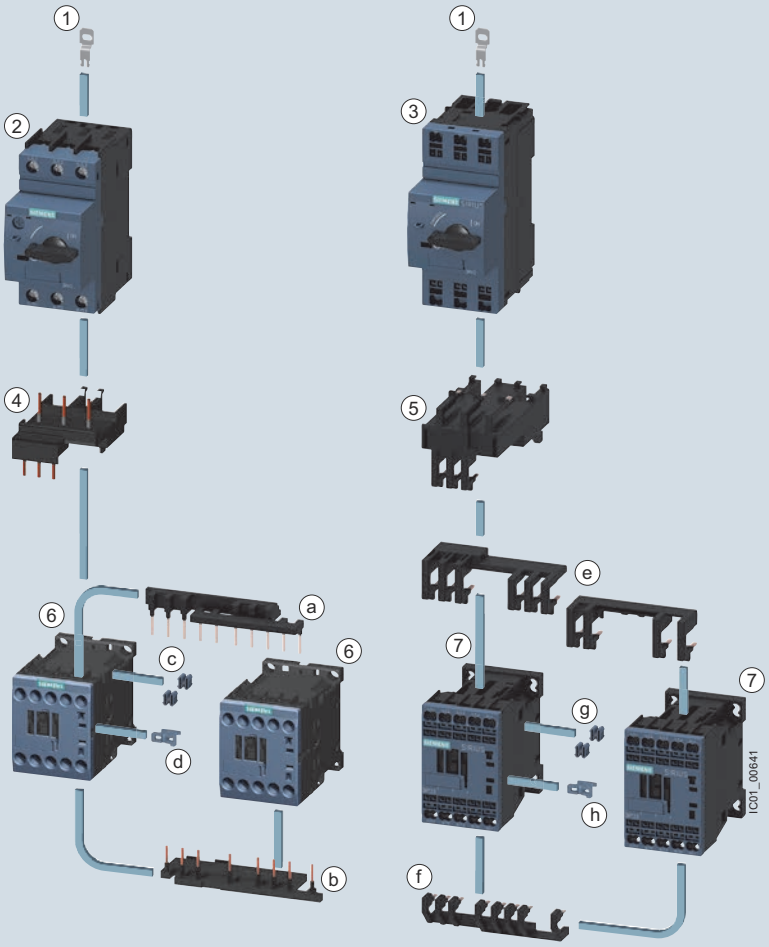

1. **Push-in lug**
   3RV2928-0B
   (only for screw fixing)
2. **Motor starter protector**
   Size S00/S0
   Screw terminal
3. **Motor starter protector**
   Size S00/S0
   Spring-type terminal
4. **Link module**
   Screw terminal
   3RA1921-1DA00 for S00
   3RA2921-1AA00 for S0, AC contactor
   3RA2921-1BA00 for S0, DC contactor
5. **Link module**
   Spring-type terminal
   3RA2911-2AA00 for S00
   3RA2921-2AA00 for S0
6. **Contactor**
   Size S00/S0
   Screw terminal
7. **Contactor**
   Size S00/S0
   Spring-type terminal

Wiring kit
3RA2913-2AA1

- a Upper wiring module
- b Lower wiring module
- c Two connecting clips for two contactors
- d Mechanical interlock
  (can be removed if necessary)

Wiring kit
3RA2913-2AA2

- e Upper wiring module
- f Lower wiring module
- g Two connecting clips for two contactors
- h Mechanical interlock
  (can be removed if necessary)

Left: 3RA22 load feeder with screw terminals with push-in lugs with two contactors for reversing duty and 3RA2913-2AA1 wiring kit for connection of the contactors (incl. mechanical interlocking and connecting clips)

Right: 3RA22 load feeder with spring-type terminals with push-in lugs with two contactors for reversing duty and 3RA2913-2AA2 wiring kit (incl. mechanical interlocking and connecting clips)

3RA2 – up to 100 A

Reversing duty • For standard rail mounting • Size S0

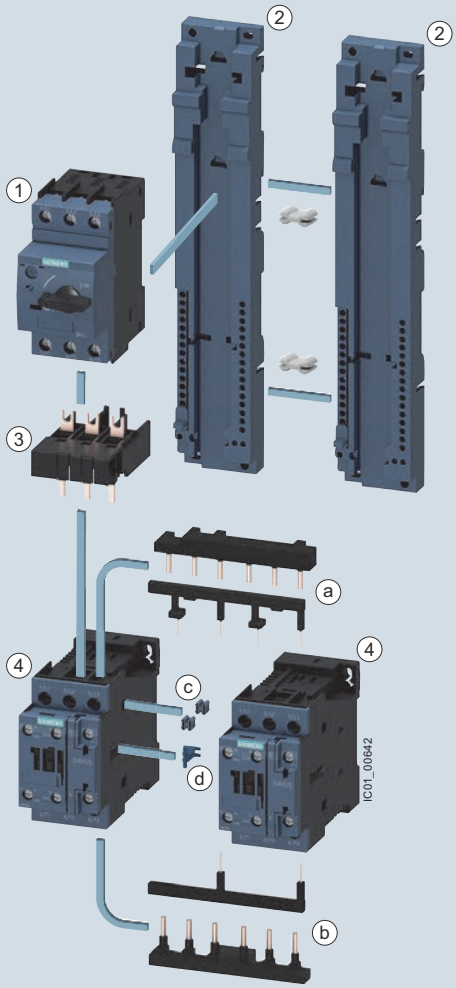

RH assembly kit for reversing duty and standard rail mounting in size S0

Screw terminals
3RA2923-1BB1

Spring-type terminals
3RA2923-1BB2[1)]

Comprising:
- Wiring kit for the main and auxiliary circuits
- Two standard mounting rail adapters
- Two connecting wedges
- Mechanical interlock
- Two connecting clips
- Fixing accessories

(1) **Motor starter protector**
Size S0
Screw terminals/spring-type terminals

(2) **Standard mounting rail adapters**
3RA2922-1AA00

with two connecting wedges
8US1998-1AA00

(3) **Link module**
Screw terminals:
3RA2921-1AA00 for S0, AC contactor
3RA2921-1BA00 for S0, DC contactor

Spring-type terminals:
3RA2921-2AA00[2)]

(4) **Contactor**
Size S0
Screw terminals/spring-type terminals

Wiring kit
Screw terminals:
3RA2923-2AA1

Spring-type terminals:
3RA2923-2AA2

(a) Upper wiring module
(b) Lower wiring module
(c) Two connecting clips for two contactors
(d) Mechanical interlock
(can be removed if necessary)

[1)] Contains two 3RA2911-1CA00 spacers for height compensation on AC contactors size S0 with spring-type terminals.

[2)] Additionally two 3RA2911-1CA00 spacers for height compensation on AC contactors size S0 with spring-type terminals.

3RA22 load feeder for reversing duty and standard rail mounting in size S0 (the version with screw terminals is shown in the picture)

RH assembly kits for reversing duty and standard rail mounting in size S0, see page 8/51.

Reversing duty • For standard rail mounting • Size S2

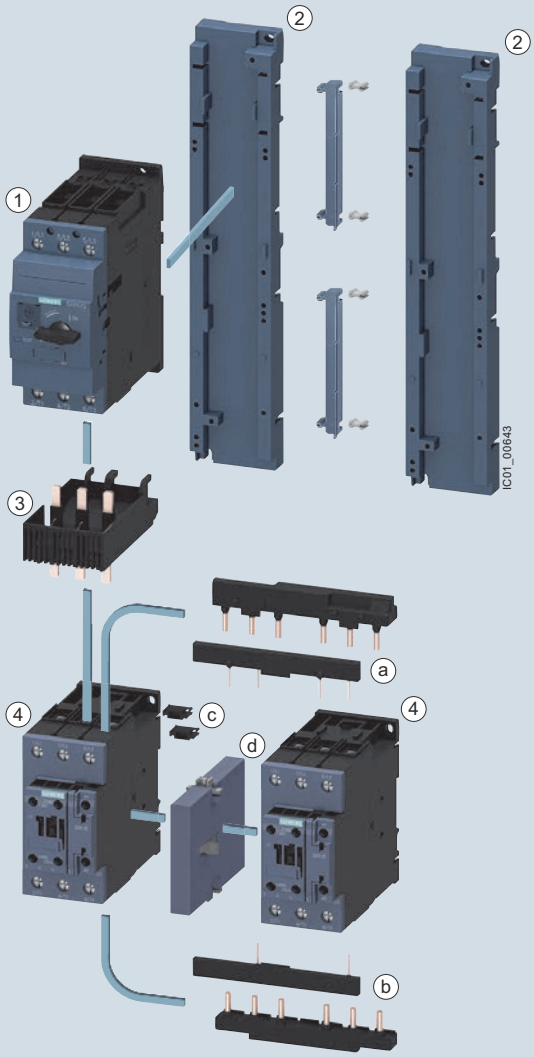

RH assembly kit for reversing duty and standard rail mounting in size S2

3RA2933-1BB1

Comprising:
- Wiring kit for the main and auxiliary circuits
- Two standard mounting rail adapters
- Two side modules
- Four connecting wedges
- Mechanical interlock
- Two connectors for two contactors
- Fixing accessories

(1) **Motor starter protector**
Size S2
Screw terminals

(2) **Standard mounting rail adapter**
3RA2932-1AA00
with two side modules
3RA1902-1B
and four connecting wedges
8US1998-1AA00

(3) **Link module**
3RA2931-1AA00
Screw terminals

(4) **Contactor**
size S2
Screw terminals

Wiring kit
Screw terminals
3RA2933-2AA1

(a) Upper wiring module

(b) Lower wiring module

(c) Two connectors for two contactors

(d) Mechanical interlock
3RA2934-2B (not part of the wiring kit, must be ordered separately)

Load feeder for reversing duty and standard rail mounting in size S2
(the version with screw terminals is shown in the picture)

RH assembly kits for reversing duty and standard rail mounting in size S2, see page 8/51.

3RA2 – up to 100 A

Reversing duty • For standard rail mounting • size S3

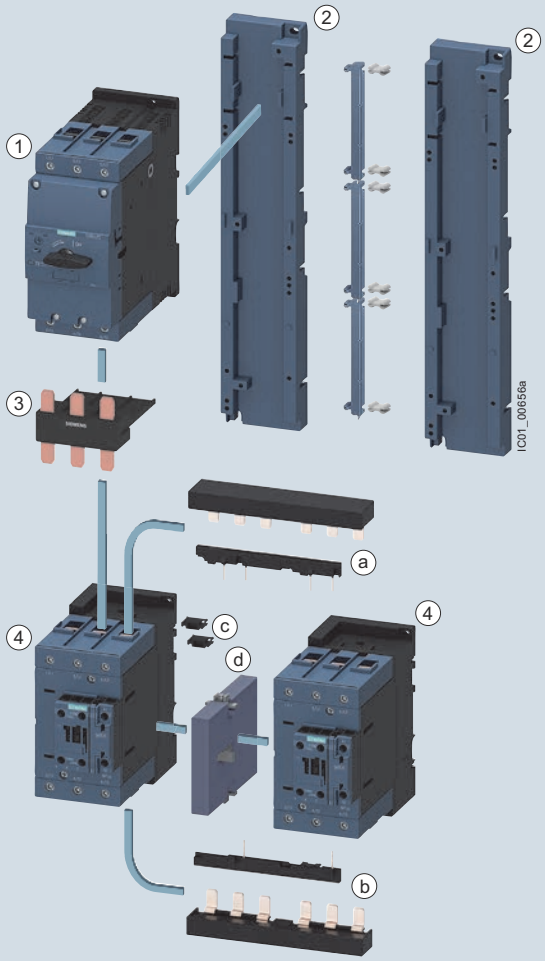

Assembly kit (RH) for reversing duty and mounting onto standard rails in size S3

3RA2943-1BB1

Comprising:
- Wiring kit for the main and auxiliary circuits
- Two standard mounting rail adapters
- Three side modules
- Six connecting wedges
- Mechanical interlock
- Two connectors for two contactors
- Fixing accessories

(1) **Motor starter protector**
size S3

(2) **Standard mounting rail adapter**
3RA2932-1AA00

with two side modules
3RA1902-1B

and four connecting wedges
8US1998-1AA00

(3) **Link module**
3RA1941-1AA00

(4) **Contactor**
size S3

Wiring kit
Screw terminals
3RA2943-2AA1

(a) Upper wiring module

(b) Lower wiring module

(c) Two connectors for two contactors

(d) Mechanical interlock
3RA2934-2B (not part of the wiring kit, must be ordered separately)

Load feeder for reversing duty and standard rail mounting in size S3 (the version with screw terminals is shown in the picture)

RH assembly kits for reversing duty and standard rail mounting in size S3, see page 8/51.

3RA2 – up to 100 A

Reversing duty • For 60 mm busbar systems • Sizes S00 and S0

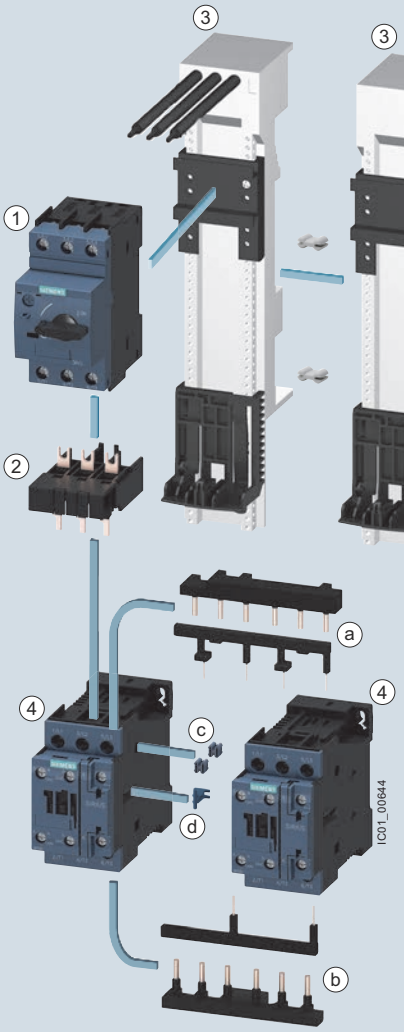

Wiring kit
Screw terminals
3RA2913-2AA1 for S00
3RA2923-2AA1 for S0

Spring-type terminals
3RA2913-2AA2 for S00
3RA2923-2AA2 for S0

(a) Upper wiring module
(b) Lower wiring module
(c) Two connecting clips for two contactors
(d) Mechanical interlock (can be removed if necessary)

RS assembly kit for reversing duty and busbar mounting in size S00/S0

Screw terminals
3RA2913-1DB1 for S00
3RA2923-1DB1 for S0

Spring-type terminals
3RA2913-1DB2 for S00
3RA2923-1DB2 for S0[1)]

Comprising:
- Wiring kit for the main and auxiliary circuits
- Busbar adapter
- Device holder
- Two connecting wedges
- Mechanical interlock
- Two connecting clips for two contactors
- Fixing accessories

(1) **Motor starter protector**
Size S00/S0
Screw terminals/spring-type terminals

(2) **Link module**
Screw terminals
3RA1921-1DA00 for S00
3RA2921-1AA00 for S0, AC contactor
3RA2921-1BA00 for S0, DC contactor

Spring-type terminals
3RA2911-2AA00 for S00
3RA2921-2AA00 for S0[2)]

(3) **60 mm busbar adapter**
Screw terminals
8US1251-5DS10 for S00/S0
8US1251-5NT10 for S0

Spring-type terminals
8US1251-5DT11 for S00/S0
8US1251-5NT11 for S0

2 connecting wedges
8US1998-1AA00

60 mm device holder
8US1250-5AS10 or
8US1250-5AT10
(according to left adapter)

(4) **Contactor**
Size S00/S0
Screw terminals/spring-type terminals

[1)] Contains two 3RA2911-1CA00 spacers for height compensation on AC contactors size S0 with spring-type terminals.

[2)] Additionally two 3RA2911-1CA00 spacers for height compensation on AC contactors size S0 with spring-type terminals.

3RA22 load feeder for reversing duty and 60 mm busbar
(the version with screw terminals is shown in the picture)

RS assembly kits for reversing duty and busbar mounting in size S00/S0, see page 8/53.

Reversing duty • For 60 mm busbar systems • size S2

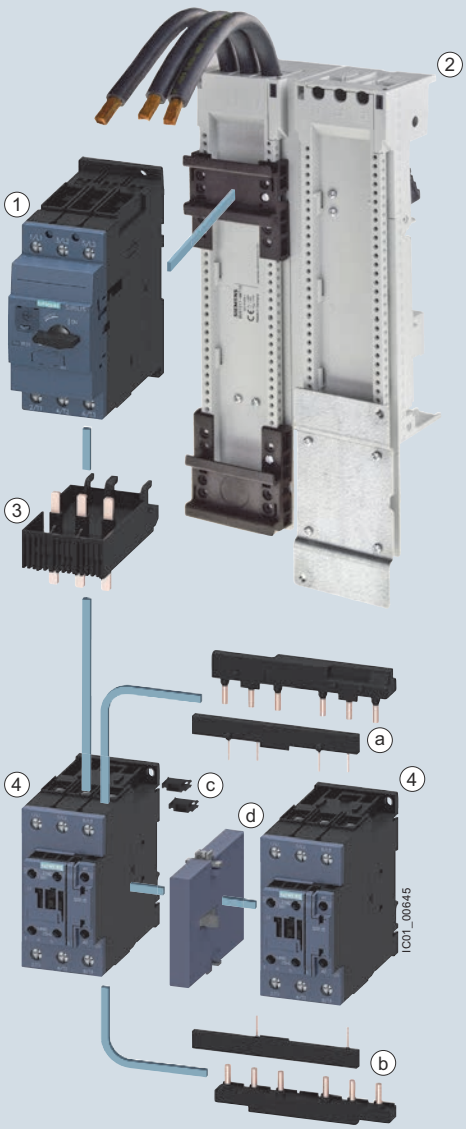

RS assembly kit for reversing duty and busbar mounting in size S2

3RA2933-1DB1

Comprising:
- Wiring kit for the main and auxiliary circuits
- Busbar adapter
- Mechanical interlock
- Two connectors for two contactors
- Fixing accessories

(1) **Motor starter protector**
Size S2
Screw terminals

(2) **Busbar adapter 60 mm**
8US1211-6MT10

(3) **Link module**
3RA2931-1AA00
Screw terminals

(4) **Contactor**
Size S2
Screw terminals

Wiring kit
For screw terminals
3RA2933-2AA1

(a) Upper wiring module

(b) Lower wiring module

(c) Two connecting pins for two contactors

(d) Mechanical interlock
3RA2934-2B (not part of the wiring kit, must be ordered separately)

Load feeder for reversing duty and 60 mm busbar in size S2
(the version with screw terminals is shown in the picture)

RS assembly kits for reversing duty and busbar mounting in size S2,
see page 8/53.

3RA2 – up to 100 A

Components for Fast Bus mounting

① Link module
for AC: 3RA19 41-1A
for DC: 3RA19 41-1B

② Mechanical interlock
3RA19 24-2B

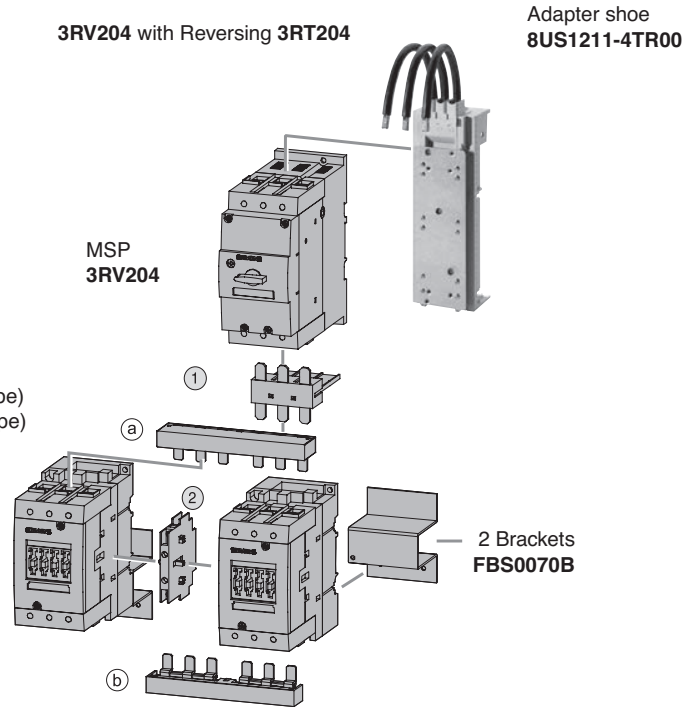

3RA2943-2AA1 Wiring kit (screw type)
3RA2943-2AA2 Wiring kit (spring type)
ⓐ Upper wiring module
ⓑ Lower wiring module

Circuit diagrams

Direct-on-line starting

Size S00: 3RA21.1

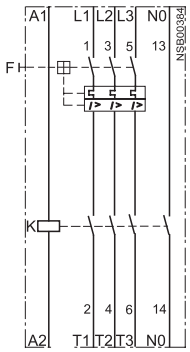

Sizes S0, S2 and S3: 3RA21 2, 3RA21 3

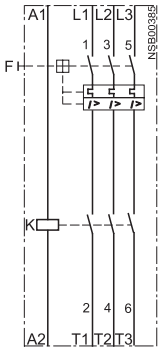

Reversing duty

Size S00: 3RA22

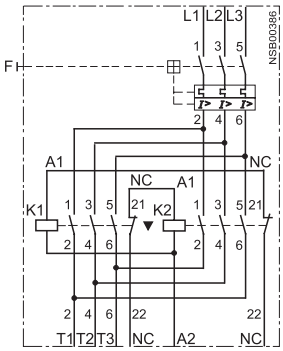

Size S0: 3RA22

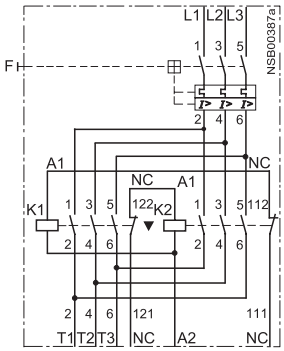

Dimension drawings

Size S00 · for standard rail mounting

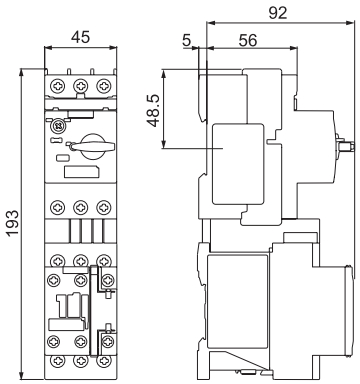

S0 direct-on-line starter,
AC, screw-type connection system
3RA2120-..A

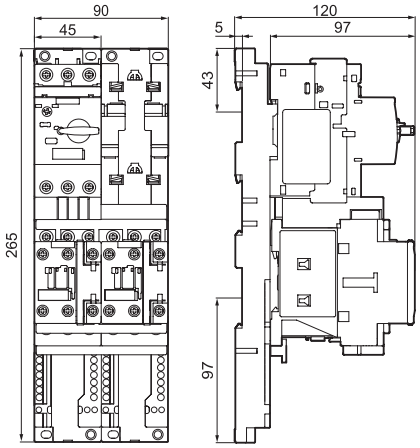

S0/S0 and S00/S0 reversing starters,
AC, screw-type connection system
3RA2220-..B..-0AP0

Size S00 · for 40 mm and 60 mm busbar systems

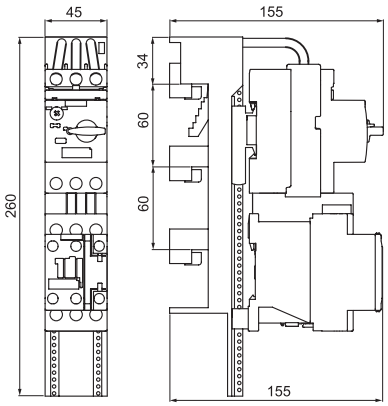

S0/S0 and S00/S0 direct-on-line starters,
AC, screw-type connection system
3RA2120-..D..-0AP0

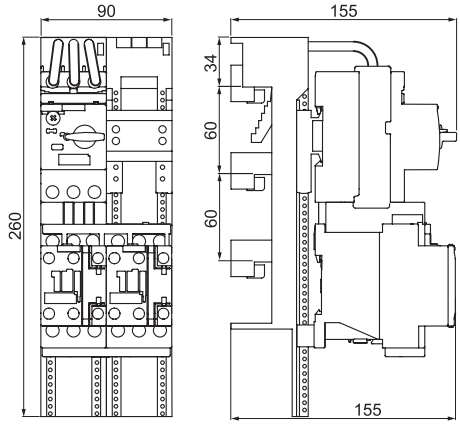

S0/S0 and S00/S0 reversing starters,
AC, screw-type connection system
3RA2220-..D..-0AP0

When mounting the combinations, observe the installation guidelines (page 4/59-4/60).

Dimension drawings

Size S0 · for standard rail mounting

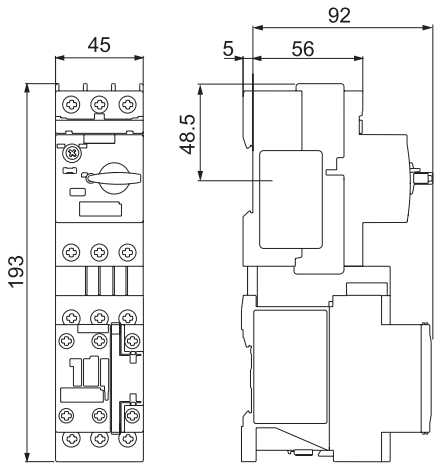

S0 direct-on-line starter, AC, screw-type connection system
3RA2120-..A

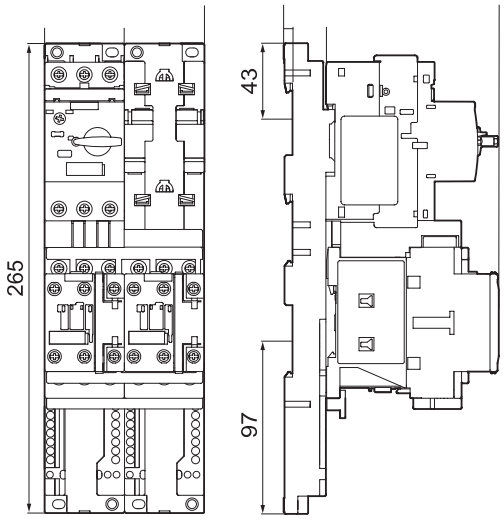

S0/S0 and S00/S0 reversing starters, AC, screw-type connection system
3RA2220-..B..-0AP0

Size S0 · for 40 mm and 60 mm busbar systems

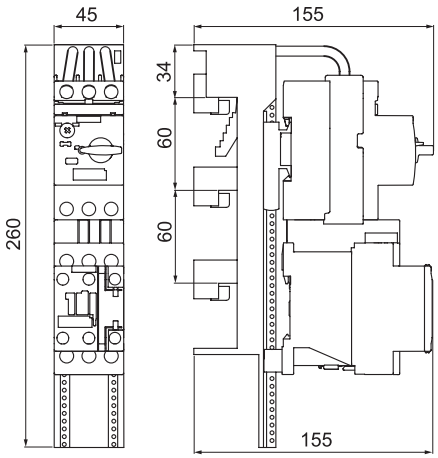

S0/S0 and S00/S0 direct-on-line starters, AC, screw-type connection system
3RA2120-..D..-0AP0

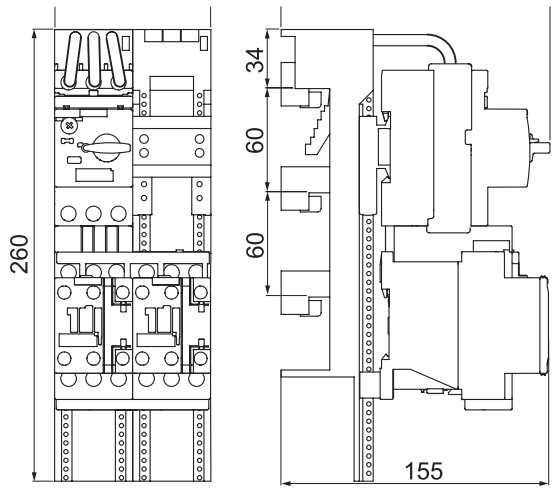

S0/S0 and S00/S0 reversing starters, AC, screw-type connection system
3RA2220-..D..-0AP0

When mounting the combinations, observe the installation guidelines (page 4/59-4/60).

Dimension drawings

Size S2 · for standard rail mounting

Direct-on-line starting

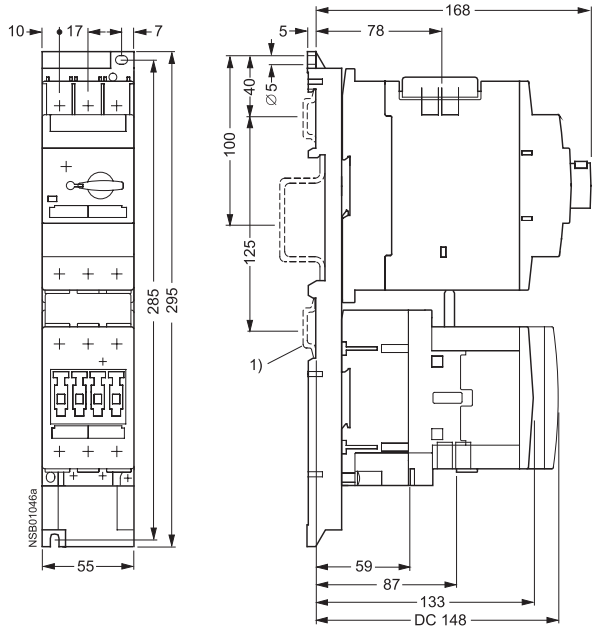

Reversing duty

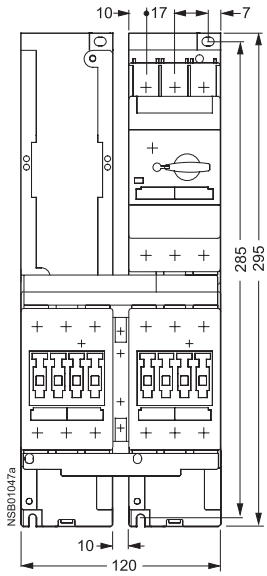

1) Alternative fixing methods
   a) 2 35 mm mounting rails acc. to DIN EN 50022 Spacing: 125 mm Depth: 7.5 or 15 mm.
   b) 1 75 mm mounting rail acc. to DIN EN 50 023.

Size S2 · for 40 mm and 60 mm busbar systems

Direct-on-line starting

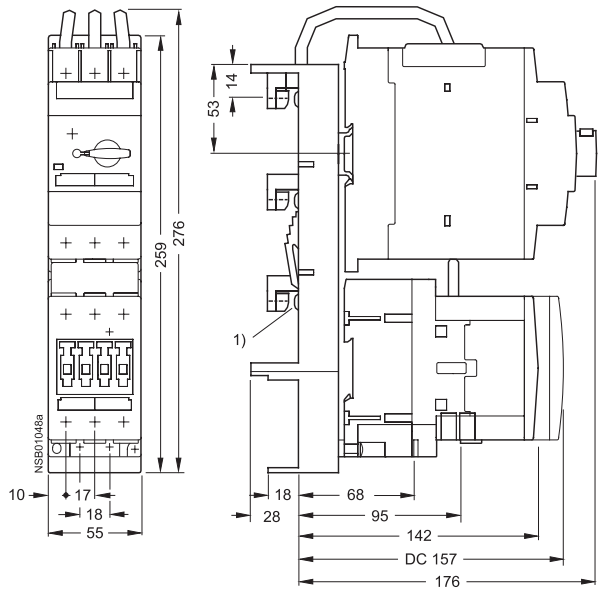

Reversing duty

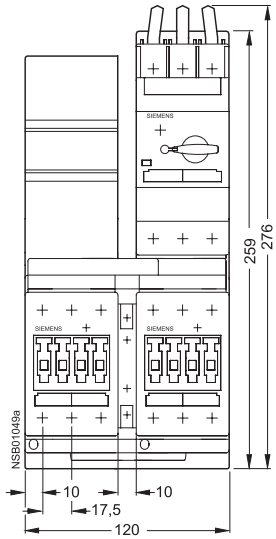

1) Busbar adapter suitable for rail thicknesses of 5 and 10 mm with chamfered edges.

When mounting the combinations, observe the installation guidelines (page 4/59-4/60).

Dimension drawings

Size S3 · for standard rail mounting

Direct-on-line starting

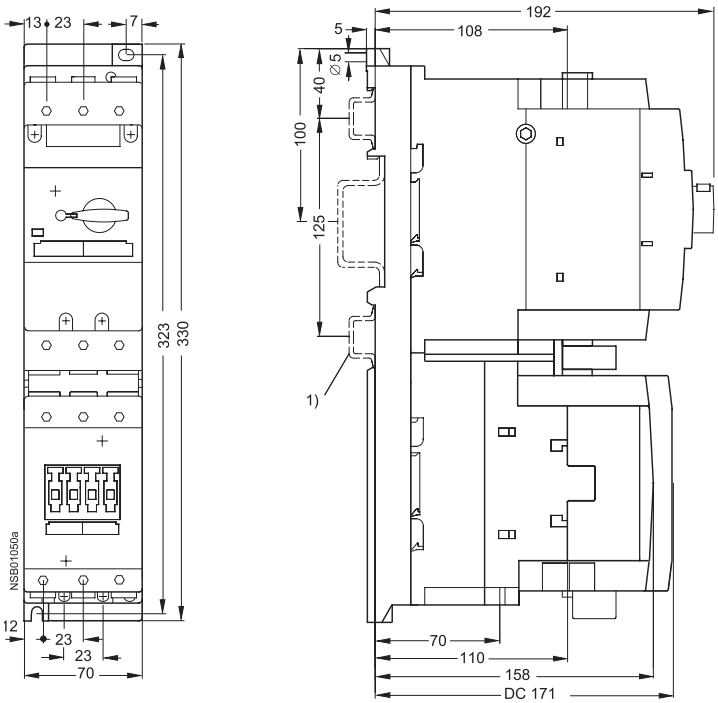

Reversing duty

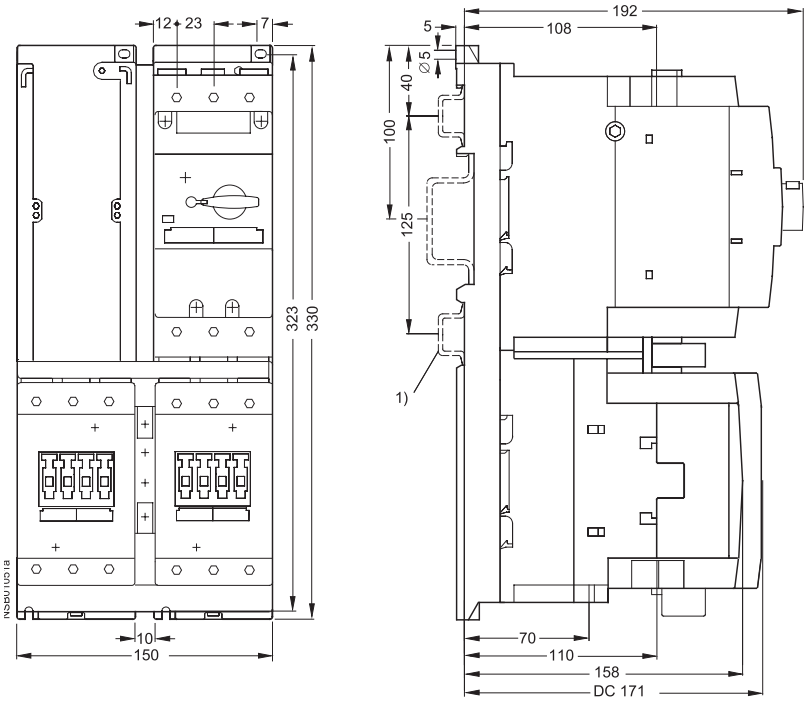

1) Alternative fixing methods
   a) 2 35 mm mounting rails acc. to DIN EN 50 022 Spacing: 125 mm Depth: 7.5 or 15 mm.
   b) 1 75 mm mounting rail acc. to DIN EN 50 023.

When mounting the combinations, observe the installation guidelines (page guidelines 4/59-4/63).

3RA8 intelligent load feeders NEW

Introduction

Overview

SIRIUS 3RA8 intelligent load feeder

More information

Homepage, see www.siemens.com/sirius-ilm

SiePortal, see www.siemens.com/product?3RA8

Further components in the ET 200SP I/O system:
- Catalog ST 70
- Homepage, see www.siemens.com/et200sp

The 3RA8 intelligent load feeders consist of the 3RV23 motor starter protector and the 3RT2 electromechanical contactor. These are electrically and mechanically connected to each other with the 3RC7 intelligent link module.

The 3RA8 intelligent load feeders are connected to the SIMATIC ET 200SP via the flexible station extension (ET connection) using the BA-Send BusAdapter.

Configuration, parameterization, and diagnostics of the feeder can be performed directly in STEP 7 (TIA Portal). The BA-Send BusAdapter supports up to 16 intelligent load feeders.

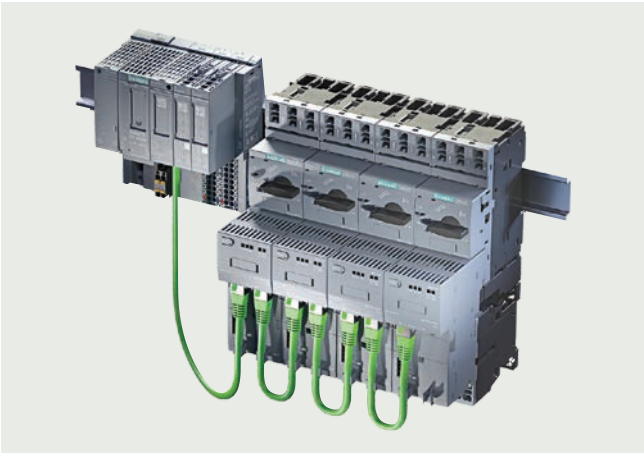

Part of the SIMATIC ET 200SP automation system

12 preassembled 3RA8 combinations can be ordered for direct-on-line and reversing starting of standard three-phase motors up to 32 A.

The feeders are equipped with either the Standard or the High Feature version of the 3RC7 intelligent link module, see also the function overview of the 3RC7 intelligent link modules on page 4/79.

In the 3RA8 intelligent load feeder, the 3RV23 motor starter protector provides short-circuit protection. Overload protection is provided by the 3RC7 intelligent link module. The intelligent load feeders are available with setting ranges from 0.4 to 32 A in sizes S00 and S0.

Operating conditions

The 3RA8 intelligent load feeders are climate-proof. They are intended for use in enclosed rooms in which no harsh operating conditions (such as dust, caustic vapors, hazardous gases) prevail. Suitable covers must be provided for installation in dusty and damp locations.

3RA8 intelligent load feeders NEW

Installation information

Tripping times

In the 3RA8 intelligent load feeder, thermal motor protection is ensured by the 3RC7 intelligent link module. The trip class (CLASS 10E or 20E) can be configured via STEP 7 (TIA Portal).

Connection methods

The 3RA8 intelligent load feeders are all provided with spring-loaded terminals.

	Spring-loaded terminals
	The connection method is indicated in the corresponding tables by the symbols shown on orange backgrounds.

Mounting

The 3RA8 intelligent load feeders are suitable for the following types of mounting:

- For mounting on TH 35-15 DIN rail according to IEC 60715
- For mounting on busbar adapters (busbar center-to-center clearance 60 mm, busbar thickness 5 to 10 mm with beveled edges)
- For screw fixing with 3RV2928-0B push-in lug
- For installation with the 3RV29 infeed system, see 3RA2 load feeders, page 4/35

Direct-on-line starter · Sizes S00 and S0

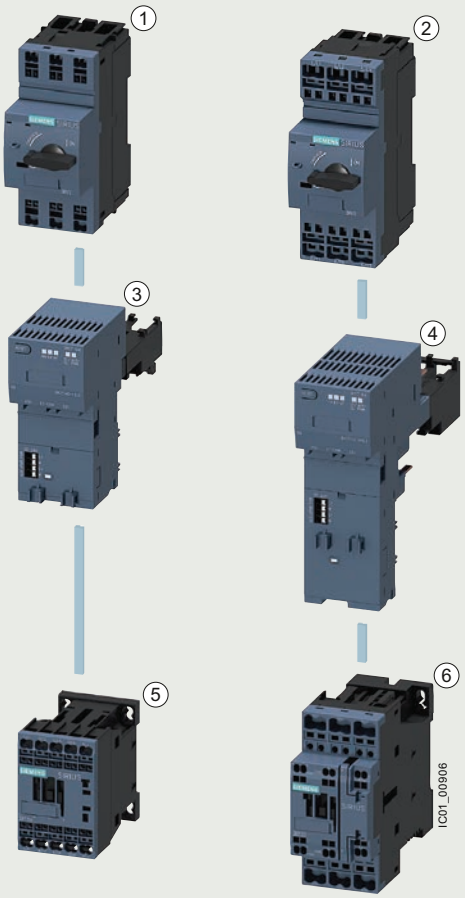

1. **Circuit breaker**
   Size S00
   Spring-loaded terminals
2. **Circuit breaker**
   Size S0
   Spring-loaded terminals
3. **Intelligent link module**
   Direct-on-line starter
   Size S00
   Spring-loaded terminals
   3RC7140-1EE00: 0.4 … 4 A, Standard
   3RC7140-1EE10: 0.4 … 4 A, High Feature
   3RC7140-1KE00: 1.2 … 12 A, Standard
   3RC7140-1KE10: 1.2 … 12 A, High Feature
4. **Intelligent link module**
   Direct-on-line starter
   Size S0
   Spring-loaded terminals
   3RC7140-4EE01: 3.5 … 32 A, Standard
   3RC7140-4EE11: 3-5 … 32 A, High Feature
5. **Contactor**
   Size S00
   Spring-loaded terminals
6. **Contactor**
   Size S0
   Spring-loaded terminals

Left: 3RA8 intelligent load feeder for direct-on-line starting with spring-loaded terminals, size S00
Right: 3RA8 intelligent load feeder for direct-on-line starting with spring-loaded terminals, size S0

Reversing starter • Sizes S00 and S0

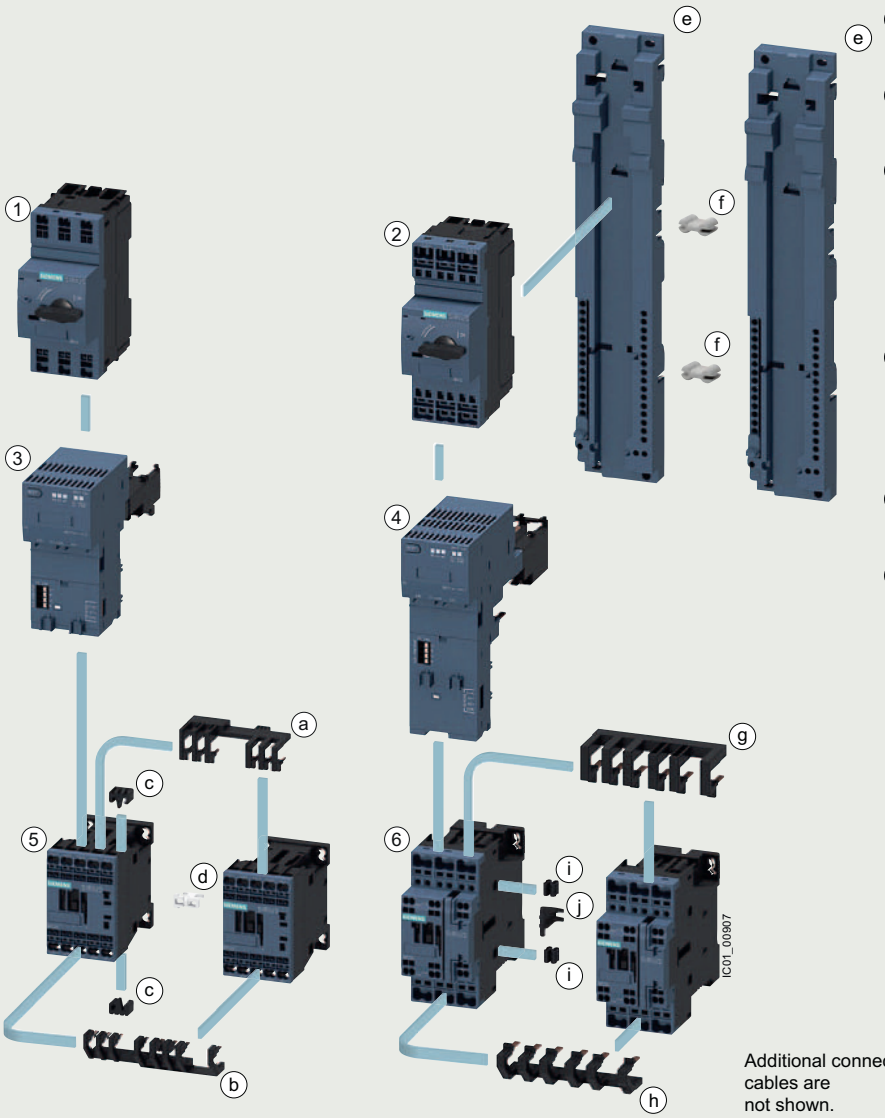

1 **Circuit breaker**
Size S00
Spring-loaded terminals

2 **Circuit breaker**
Size S0
Spring-loaded terminals

3 **Intelligent link module**
Reversing starter
Size S00
Spring-loaded terminals
3RC7141-1EE00: 0.4 … 4 A, Standard
3RC7141-1EE10: 0.4 … 4 A, High Feature
3RC7141-1KE00: 1.2 … 12 A, Standard
3RC7141-1KE10: 1.2 … 12 A, High Feature

4 **Intelligent link module**
Reversing starter
Size S0
Spring-loaded terminals
3RC7141-4EE01: 3.5 … 32 A, Standard
3RC7141-4EE11: 3-5 … 32 A, High Feature

5 **Contactor**
Size S00
Spring-loaded terminals

6 **Contactor**
Size S0
Spring-loaded terminals

Additional connecting cables are not shown.

Wiring kit
3RA2913-2LA2
Reversing starter
- a Upper wiring module
- b Lower wiring module
- c Two connecting clips for two contactors
- d Mechanical interlock

Wiring kit
3RA2923-2LB2
Reversing starter
- e Two 3RA2922-1AA00 DIN-rail adapters
- f Two 8US1998-1AA00 link wedges
- g Upper wiring module
- h Lower wiring module
- i Two connecting clips for two contactors
- j Mechanical interlock

Left: 3RA8 intelligent load feeder for reversing starting in size S00
Right: 3RA8 intelligent load feeder for reversing starting and DIN-rail mounting in size S0

3RA8 intelligent load feeders NEW

Catalog number builder

Article number scheme

Product versions		Article number									
SIRIUS intelligent load feeders		**3RA8**	□	□	□	–	□	□	□	□	**0**
Product function	Direct-on-line starters		**4**								
	Reversing starters		**5**								
Size	S00			**1**							
	S0			**2**							
Type of coordination	"1"				**1**						
	"2"				**2**						
Current range	0.4 ... 4 A						**1**	**E**			
	1.2 ... 12 A						**1**	**K**			
	3.5 ... 32 A						**4**	**E**			
Connection methods	Spring-loaded terminals								**E**		
Version	Standard									**0**	
	High Feature									**1**	
Example		**3RA8**	**4**	**1**	**2**	**–**	**1**	**E**	**E**	**0**	**0**

Note:

The article number scheme shows an overview of product versions for better understanding of the logic behind the article numbers.

For your orders, please use the article numbers quoted in the selection and ordering data.

Benefits

Part of the SIMATIC automation system

- One engineering tool for the entire automation system
- Configuration and parameterization in STEP 7 (TIA Portal)
- Easy reading of status and current values
- Error and maintenance demands with stored plain text messages through integrated system diagnostics in the SIMATIC environment

Transparency down to the field level

- Measurement of current, voltage, and power (including power factor)
- Load diagnostics (1 or 3-phase)

Proactive protection

- Extended wide setting range of the overload protection function
- Preventive maintenance by detecting faults and discrepancies

Minimal effort

- Reduced wiring costs
- Standardized design due to fewer versions
- Extensive accessories

3RA8 intelligent load feeders NEW

Technical information

Technical specifications

More information	
SiePortal, see www.siemens.com/product?3RA8	Equipment Manual, see https://support.industry.siemens.com/cs/ww/en/view/109823514

Article number		3RA8412-1EE.0	3RA8512-1EE.0	3RA8411-1KE.0	3RA8511-1KE.0	3RA8422-4EE.0	3RA8522-4EE.0
General technical specifications							
Width × height × depth 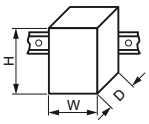	mm	45 x 198 x 131	90 x 204 x 131	45 x 198 x 131	90 x 204 x 131	45 x 243 x 150	90 x 269 x 174
Installation altitude at height above sea level, maximum	m	2 000					
Ambient temperature							
• During operation	°C	-20 ... +60					
• During storage	°C	-40 ... +80					
• During transport	°C	-40 ... +80					
Vibration resistance		5 ... 8.4 Hz, 3.5 mm; 8.4 ... 150 Hz, 1 *g*; 10 cycles/10 ... 60 Hz, 0.35 mm; 60 ... 500 Hz, 5 *g*; 10 cycles					
Shock resistance According to IEC 60068-2-27		6 *g*/11.0 ms (3 shocks); 10 *g*/6.0 ms (1 000 shocks)					
Degree of protection IP on the front		IP20					
Touch protection on the front According to IEC 60529		Finger-safe					
Electrical specifications							
Adjustable current response value of the inverse-time delayed overload release	A	0.4 ... 4		1.2 ... 12		3.5 ... 32	
Operational voltage at AC-3, rated value, maximum	V	690					
Operating frequency	Hz	50 ... 60					
Impulse withstand voltage	kV	6					
Conditional short-circuit current (*Iq*) at 400 V According to IEC 60947-4-1	A	150 000					
Power loss (W) at rated current at AC in the warm operating state per pole	W	2.6		3.6		6.7	
Trip class		CLASS 10E/CLASS 20E					
Type of coordination		"2"		"1"		"2"	
Conductor cross-sections							
Connection of the electrical connection for the main circuit		**Spring-loaded terminals**					
Type of connectable conductor cross-sections							
• For main contacts							
- Solid		2 x (0.5 ... 4 mm^2)				2 x (1 ... 10 mm^2)	
- Stranded		2 x (0.5 ... 4 mm^2)				2 x (1 ... 10 mm^2)	
- Finely stranded with end sleeve		2 x (0.5 ... 2.5 mm^2)				2 x (1 ... 6 mm^2)	
- For AWG cables		2 x 20 ... 12				2 x 18 ... 8	
Type of electrical connection for infeed of the supply voltage		**Spring-loaded terminals (push-in)**					
Type of connectable conductor cross-sections							
• At the inputs for supply voltage							
- Solid		0.2 ... 1.5 mm^2					
- Finely stranded without end sleeve		0.2 ... 1.5 mm^2					
- Finely stranded with end sleeve		0.2 ... 1.0 mm^2					
- Solid for AWG cables		24 ... 16					

3RA8 intelligent load feeders NEW

Product selection IE3/IE4 ready AC-3e

Selection and ordering data

	Size of the load feeder	Adjustable current response value of the inverse-time delayed overload release	Type of coordination	Spring-loaded terminals		PU (UNIT, SET, M)	PS*
		A		Article No.	Price per PU		
Intelligent load feeders							
	Direct-on-line starters						
	Standard						
3RA8412-1EE00	S00	0.4 ... 4	"2"	**3RA8412-1EE00**		1	1 unit
		1.2 ... 12	"1"	**3RA8411-1KE00**		1	1 unit
	S0	3.5 ... 32	"2"	**3RA8422-4EE00**		1	1 unit
	High Feature						
3RA8412-4EE10	S00	0.4 ... 4	"2"	**3RA8412-1EE10**		1	1 unit
		1.2 ... 12	"1"	**3RA8411-1KE10**		1	1 unit
	S0	3.5 ... 32	"2"	**3RA8422-4EE10**		1	1 unit
	Reversing starters						
	Standard						
3RA8512-1EE00	S00	0.4 ... 4	"2"	**3RA8512-1EE00**		1	1 unit
		1.2 ... 12	"1"	**3RA8511-1KE00**		1	1 unit
	S0	3.5 ... 32	"2"	**3RA8522-4EE00**		1	1 unit
	High Feature						
3RA8522-4EE10	S00	0.4 ... 4	"2"	**3RA8512-1EE10**		1	1 unit
		1.2 ... 12	"1"	**3RA8511-1KE10**		1	1 unit
	S0	3.5 ... 32	"2"	**3RA8522-4EE10**		1	1 unit

Notes:

Individual components of the 3RA8 intelligent load feeders, see table on page 4/80.

3RC7 intelligent link modules NEW

Introduction

Overview

SIRIUS 3RC7 intelligent link module

More information
Homepage, see www.siemens.com/sirius-ilm
SiePortal, see www.siemens.com/product?3RC7
Further components in the ET 200SP I/O system: • Catalog ST 70 • Homepage, see www.siemens.com/et200sp

The SIRIUS 3RC7 intelligent link module is the perfect connection between the Siemens SIRIUS and SIMATIC product families. The 3RC7 intelligent link module turns conventional load feeders into digital load feeders. The SIRIUS modular system becomes a communication-capable and configurable system with SIMATIC.

Video: SIRIUS Modular System goes digital

Part of the SIRIUS modular system

The 3RC7 intelligent link module connects the 3RV2 motor starter protectors/circuit breakers and the 3RT2 contactors to form an intelligent load feeder. Intelligent load feeders can also be ordered as a 3RA8 complete unit, see page 4/77.

Control, protection, and monitoring of all AC load types are possible up to a rated current of 32 A. 1- or 3-phase loads can be operated.

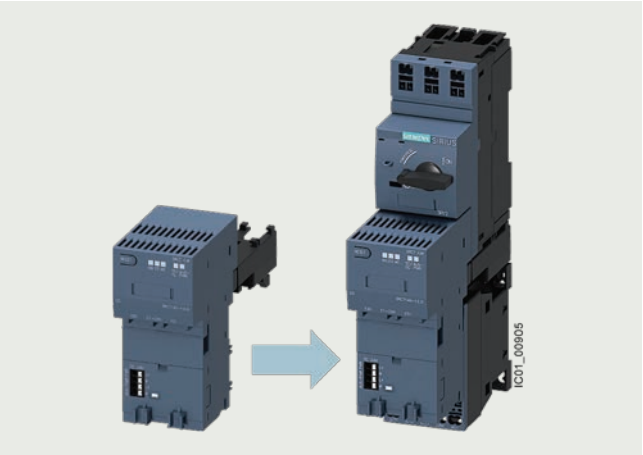

SIRIUS 3RC7 intelligent link module combined with the 3RV2 motor starter protector/circuit breaker and 3RT2 contactor

The 3RC7 intelligent link module is available for direct-on-line and reversing starters (Standard or High Feature):

- Size S00: Current ranges 0.4 to 4 A and 1.2 to 12 A
- Size S0: Current range 3.5 to 32 A

The intelligent link modules are offered with spring-loaded terminals and permit very fast mounting of the load feeders and a vibration-resistant design.

Mounting

Load feeders with 3RC7 intelligent link modules are suitable for the following types of mounting:

- For 1- or 2-row mounting on TH 35-15 DIN rail according to IEC 60715 (adapter for stand-alone installation, see page 4/83)
- For mounting on busbar adapters (busbar center-to-center clearance 60 mm, busbar thickness 5 to 10 mm with beveled edges)
- For screw fixing with 3RV2928-0B push-in lug
- For installation with the 3RV29 infeed system, see 3RA2 load feeders, page 4/35

3RC7 intelligent link modules NEW

Configuration information

Overview of functions

The 3RC7 intelligent link module controls the 3RT2 contactor, following the commands of the controller. In the event of a fault, e.g. overload, undervoltage, or phase asymmetry, the intelligent link module switches off the 3RT2 contactor.

With the help of current and voltage measurement, detailed diagnostics of the load can be performed.

Function	3RC7 ILM Standard	3RC7 ILM High Feature
Control (contact block)	✓	✓
Electronic motor overload protection	CLASS 10E/ CLASS 20E[1)]	CLASS 10E/ CLASS 20E[1)]
RESET	✓	✓
Current measurement and monitoring	✓	✓
Current phase asymmetry	✓	✓
Line voltage detection	✓	✓
Line voltage measurement and monitoring	--	✓
Supply voltage monitoring for electronics (PWR)	✓	✓
Supply voltage monitoring for contact block (AUX-PWR)	✓	✓
Starting time monitoring	✓	✓
Power measurement	--	✓
EMERGENCY START	✓	✓
Operating temperature measurement and monitoring	✓	✓
Group diagnostics	✓	✓
Cold start	✓	✓

✓ Available

-- Not available

1) CLASS 20E to 20 A.

The intelligent link module in the standard version detects the voltage at its input side.

The High Feature version can also be used to measure the phase voltage and the power (including power factor) of the connected load.

With the help of the 3RC7 intelligent link module, the operating hours of the load feeder as well as of the load can be recorded. Moreover, fault-induced shutdowns can be documented.

Part of the SIMATIC ET 200SP automation system

The 3RC7 intelligent link modules are connected to the SIMATIC ET 200SP via the flexible station extension (ET connection) using the BA-Send BusAdapter.

Configuration, parameterization, and diagnostics of the intelligent load feeder can be performed directly in STEP 7 (TIA Portal).

Video: Configuration and parameterization in STEP 7 (TIA Portal)

The ET 200SP BA-Send BusAdapter supports up to 16 intelligent load feeders. The distance between the BA-Send BusAdapter and the first 3RC7 intelligent link module can be up to 10 m.

Distances of up to two meters are possible between the individual intelligent load feeders.

The following devices are required for integration of the 3RC7 intelligent link module into the SIMATIC ET 200SP automation system:

- SIMATIC ET 200SP interface modules and CPUs
- BA-Send BusAdapter (6ES7193-6AS00-0AA0)
- BU-Send BaseUnit (6ES7193-6BN00-0NE0)

For more information on SIMATIC ET 200SP, see www.siemens.com/et200sp.

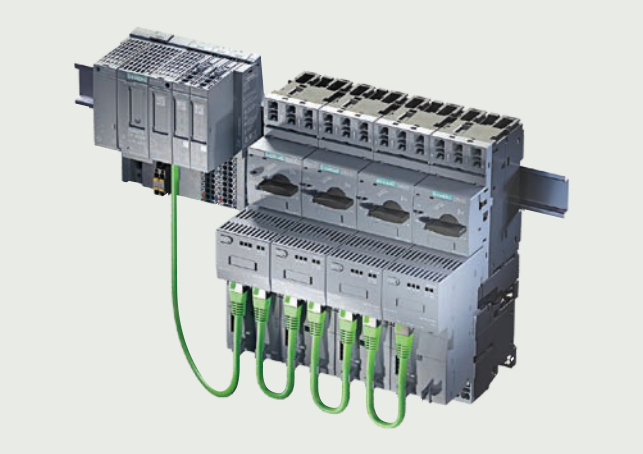

Part of the SIMATIC ET 200SP automation system

The 3RC7 intelligent link modules enable a high level of data transparency down to the field level and connect the operational technology (OT) with the overarching information technology (IT). By exchanging and using real-time data, operating processes can be optimized (condition monitoring, preventive maintenance) and the operational efficiency of the plant can be increased in a targeted manner.

3RC7 intelligent link modules NEW

Configuration information

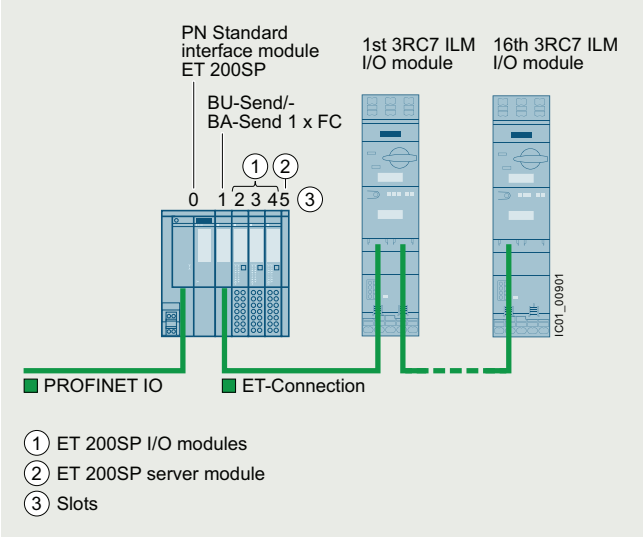

System overview using the example of PROFINET IO

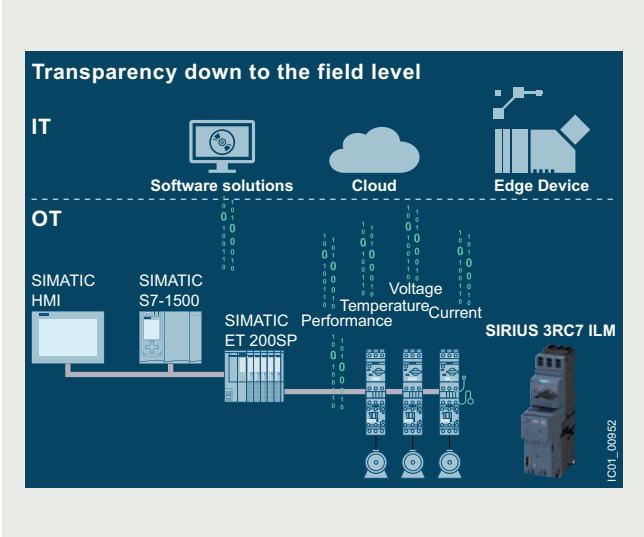

Connectivity and transparency in the manufacturing environment

Building intelligent load feeders from individual components

Recommended combinations

Size	Consisting of the following individual components, which are to be ordered separately					Corresponds to the following 3RA8 load feeder see page 4/77
	Motor starter protector (without overload)	Contactor	3RC7 intelligent link module I_e in A see page 4/82		Mounting kit see page 4/84	
Intelligent load feeder for direct-on-line starting						
S00	3RV2311-1EC20	3RT2017-2BB42	0.4 ... 4	3RC714.-1EE.0[1]	--	3RA8412-1EE.0
	3RV2311-1KC20		1.2 ... 12	3RC714.-1KE.0[1]	--	3RA8411-1KE.0
S0	3RV2321-4EC20	3RT2027-2BB40	3.5 ... 32	3RC714.-4EE.1[1]	--	3RA8422-4EE.0
Intelligent load feeder for reversing starting						
S00	3RV2311-1EC20	3RT2017-2BB42 (2 x)	0.4 ... 4	3RC714.-1EE.0[1]	3RA2913-2LA2	3RA8512-1EE.0
	3RV2311-1KC20		1.2 ... 12	3RC714.-1KE.0[1]		3RA8511-1KE.0
S0	3RV2321-4EC20	3RT2027-2BB40 (2 x)	3.5 ... 32	3RC714.-4EE.1[1]	3RA2923-2LB2[2]/ 3RA2923-2MB2[3]	3RA8522-4EE.0

1) 3RC7 ILM can be used as a Standard or High Feature version.
2) To build an intelligent load feeder for reversing starting of size S0, the 3RA2923-2LB2 assembly kit must be used. The DIN-rail adapters included in the assembly kit are essential for DIN-rail mounting.
3) To build an intelligent load feeder for reversing starting of size S0 in the 3RV29 infeed system or on the 8US busbar adapter, the 3RA2923-2MB2 assembly kit must be used.

Note:

For graphic overviews of the recommended 3RA8 load feeders, see pages 4/73 and4/74

3RC7 intelligent link modules NEW

Technical information

Benefits

Part of the SIMATIC automation system

- One engineering tool for the entire automation system
- Configuration and parameterization in STEP 7 (TIA Portal)
- Easy reading of status and current values
- Error and maintenance demands with stored plain text messages through integrated system diagnostics in the SIMATIC environment

Transparency down to the field level

- Measurement of current, voltage, and power (including power factor)
- Load diagnostics (1- or 3-phase)

Proactive protection

- Extended wide setting range of the overload protection function
- Preventive maintenance by detecting faults and discrepancies

Minimal effort

- Reduced wiring costs
- Standardized design due to fewer versions
- Extensive accessories

Technical specifications

More information	
SiePortal, see www.siemens.com/product?3RC7	Equipment Manual, see https://support.industry.siemens.com/cs/ww/en/view/109823514

Article number			3RC7140-1EE.0, 3RC7141-1EE.0	3RC7140-1KE.0, 3RC7141-1KE.0	3RC7140-4EE.1, 3RC7141-4EE.1
General data					
Installation altitude at height above sea level, maximum		m	2 000		
Ambient temperature					
• During operation		°C	-20 ... +60		
• During storage		°C	-40 ... +80		
• During transport		°C	-40 ... +80		
Vibration resistance			5 ... 8.4 Hz, 3.5 mm; 8.4 ... 150 Hz, 1 *g*; 10 cycles/10 ... 60 Hz, 0.35 mm; 60 ... 500 Hz, 5 *g*; 10 cycles		
Shock resistance	According to IEC 60068-2-27		6 *g*/11.0 ms (3 shocks); 10 *g*/6.0 ms (1 000 shocks)		
Degree of protection IP			IP20		
Touch protection on the front	According to IEC 60529		Finger-safe		
EMC interference immunity	According to IEC 60947-1		Environment A		
Conducted interference due to burst	According to IEC 61000-4-4	kV	2		
Frequency of operation, maximum		1/h	3 600		
Main circuit					
Adjustable current response value of the inverse-time delayed overload release		A	0.4 ... 4	1.2 ... 12	3.5 ... 32
Operational voltage at AC-3e, rated value, maximum		V	690		
Type of current for monitoring			AC		
Operating frequency, rated value		Hz	50 ... 60		
Impulse withstand voltage		kV	6		
Trip class			CLASS 10E/CLASS 20E		
Auxiliary circuit					
Supply voltage at DC		V	24		
Auxiliary voltage at DC		V	24		
Connections					
Type of electrical connection for infeed of the supply voltage			**Spring-loaded terminals (push-in)**		
Type of connectable conductor cross-sections on the inputs for supply voltage					
• Solid			0.2 ... 1.5 mm^2		
• Finely stranded with end sleeve			0.2 ... 1.0 mm^2		
• Solid for AWG cables			24 ... 16		

3RC7 intelligent link modules NEW

Selection and ordering data

	Size	Adjustable current response value of the inverse-time delayed overload release	Spring-loaded terminals (push-in)		PU (UNIT, SET, M)	PS*
		A	Article No.	Price per PU		
3RC7 intelligent link modules						
	Direct-on-line starters					
	Standard					
3RC7140-1EE00	S00	0.4 ... 4	**3RC7140-1EE00**		1	1 unit
		1.2 ... 12	**3RC7140-1KE00**		1	1 unit
	S0	3.5 ... 32	**3RC7140-4EE01**		1	1 unit
	High Feature					
3RC7140-4EE11	S00	0.4 ... 4	**3RC7140-1EE10**		1	1 unit
		1.2 ... 12	**3RC7140-1KE10**		1	1 unit
	S0	3.5 ... 32	**3RC7140-4EE11**		1	1 unit
	Reversing starters					
	Standard					
3RC7141-1EE00	S00	0.4 ... 4	**3RC7141-1EE00**		1	1 unit
		1.2 ... 12	**3RC7141-1KE00**		1	1 unit
	S0	3.5 ... 32	**3RC7141-4EE01**		1	1 unit
	High Feature					
3RC7141-4EE11	S00	0.4 ... 4	**3RC7141-1EE10**		1	1 unit
		1.2 ... 12	**3RC7141-1KE10**		1	1 unit
	S0	3.5 ... 32	**3RC7141-4EE11**		1	1 unit

3RC7 intelligent link modules NEW

Product Selection Accessories

	Product version	Article No.	Price per PU	PU (UNIT, SET, M)	PS*
Accessories					
		Spring-loaded terminals			
3RC7940-2TE00	**Adapter for stand-alone installation**				
	• For 3RC7 with contactor size S00	**3RC7940-2TE00**		1	1 unit
	• For 3RC7 with contactor size S0	**3RC7940-2TE01**		1	1 unit
	Communication cable				
	between ET 200SP BusAdapter and 3RC7 ILM				
3RC7940-0TE10	• Length 0.5 m	**3RC7940-0TE10**		1	1 unit
	• Length 2 m	**3RC7940-0TE20**		1	1 unit
	• Length 5 m	**3RC7940-0TE30**		1	1 unit
	• Length 10 m	**3RC7940-0TE40**		1	1 unit
	From 3RC7 ILM to 3RC7 ILM				
3RC7940-0TE01	• For direct-on-line starters (side-by-side mounting)	**3RC7940-0TE01**		1	1 unit
	• For reversing starters (side-by-side mounting)	**3RC7940-0TE02**		1	1 unit
	• Length 0.75 m	**3RC7940-0TE03**		1	1 unit
	• Length 1.5 m	**3RC7940-0TE04**		1	1 unit
	• Length 2 m	**3RC7940-0TE05**		1	1 unit
	Power Cable				
3RC7940-1TE01	• For direct-on-line starters	**3RC7940-1TE01**		1	1 unit
	• For reversing starters	**3RC7940-1TE02**		1	1 unit

3RC7 intelligent link modules NEW

Product Selection Wiring kits

	For contactor Size	Product version	Spring-loaded terminals Article No.	Price per PU	PU (UNIT, SET, M)	PS*
Wiring kits for reversing starters						
		RH mounting kit for spring-loaded terminals				
3RA2913-2LA2	S00	Mounting on a DIN rail, 60 mm 8US busbar system or 3RV29 infeed system	**3RA2913-2LA2**		1	1 unit
3RA2923-2LB2	S0	Mounting on DIN rail	**3RA2923-2LB2**		1	1 unit
3RA2923-2MB2		Mounting on 60 mm 8US busbar system or 3RV29 infeed system	**3RA2923-2MB2**		1	1 unit

3RE4 Enclosed IEC Controllers

Product overview

3RE4 Enclosed IEC motor controllers are well suited for both industrial and commercial applications. They are durable and dependable, particularly when it comes to motor protection. Protecting the performance of motors is a critical priority and the 3RE4 enclosed starters are offered with either thermal or solid-state overload relays to maximize your motor protection.

Controller Features

General

- UL motor horsepower rated
- From fractional up to 60 Hp at 575 V
- Non-combination type starters and contactors
- Reversing and non-reversing controllers
- Single phase and 3-phase loads
- Thermal and solid-state overload relays
- NEMA Type enclosures 1, 3/3R/4/12 and 4X 304 stainless steel
- Standard size and extra larger enclosures
- RoHS compliant
- Standards: UL 60947-4-1
- Certifications: cULus

Contactor

- Horsepower rated per UL
- High contact reliability
- NO and NC auxiliary contacts included as standard
- Permanently secured with screws on mounting panel
- Screw type terminal connections

Overload Relay Features

Thermal overload relays

- Trip Class 10
- Phase failure sensitivity
- UL for Single and three phase loads
- Includes NC trip contact and NO alarm contact
- Manual and automatic RESET (selectable)
- Switch position indicator
- TEST function
- STOP button
- Sealable cover (optional)
- Screw-type terminals

Solid-state overload relays

- Selectable Trip Class 5, 10, 20 and 30
- Overload, phase failure and unbalance protection
- Internal ground fault detection (selectable)
- Internal power supply
- Includes NC trip contact and NO alarm contact
- Manual and automatic RESET (selectable)
- Electrical remote RESET integrated
- Switch position indicator
- TEST function and self-monitoring
- Sealable cover (optional)
- Screw-type terminals

Available Factory Mods, Field Kits, Accessories

Factory modifications

- Push buttons
- Selector switches
- Pilot lights
- Control power transformers

Field kits and accessories

- Push buttons
- Selector switches
- Pilot lights
- Auxiliary contacts
- Control power transformers
- Control relays and timers
- Control circuit fuse block
- Terminal blocks
- etc.

Catalog Numbering System

3RE4 Nomenclature
Non-Combination Controllers

3RE4 1 2 2 – 3 A A 3 1 – 1 H Y 0

Controller Type

- **11** = Non-combination non-reversing starter,1-phase, 2-pole
- **12** = Non-combination non-reversing starter,3-phase, 3-pole
- **14** = Non-combination reversing starter, 3-phase, 3-pole
- **16** = Non-combination non-reversing contactor
- **18** = Non-combination reversing contactor

Frame Size: UL60947-4-1 Hp Rating

- **15** = S00: 1-Ph Hp (0.25@115V, 0.5@208V, 0.75@230V), 3-Ph Hp (1.5@208V, 2@230V, 3@460V, 5@575V)
- **17** = S00: 1-Ph Hp (0.5@115V, 1.5@208V, 2@230V), 3-Ph Hp (3@208V, 3@230V, 7.5@460V, 10@575V)
- **23** = S0: 1-Ph Hp (1@115V, 1@208V, 1@230V), 3-Ph Hp (2@208V, 3@230V, 5@460V, 7.5@575V)
- **24** = S0: 1-Ph Hp (1@115V, 2@208V, 2@230V), 3-Ph Hp (3@208V, 3@230V, 7.5@460V, 10@575V)
- **25** = S0: 1-Ph Hp (1@115V, 2@208V, 3@230V), 3-Ph Hp (5@208V, 5@230V, 10@460V, 15@575V)
- **26** = S0: 1-Ph Hp (2@115V, 3@208V, 3@230V), 3-Ph Hp (7.5@208V, 7.5@230V, 15@460V, 20@575V)
- **27** = S0: 1-Ph Hp (2@115V, 5@208V, 5@230V), 3-Ph Hp (10@208V, 10@230V, 20@460V, 25@575V)
- **28** = S0: 1-Ph Hp (3@115V, 5@208V, 5@230V), 3-Ph Hp (10@208V, 10@230V, 25@460V, 25@575V)
- **35** = S2: 1-Ph Hp (3@115V, 5@208V, 7.5@230V), 3-Ph Hp (10@208V, 15@230V, 30@460V, 40@575V)
- **36** = S2: 1-Ph Hp (3@115V, 7.5@208V, 10@230V), 3-Ph Hp (15@208V, 15@230V, 40@460V, 50@575V)
- **37** = S2: 1-Ph Hp (5@115V, 10@208V, 10@230V), 3-Ph Hp (20@208V, 20@230V, 50@460V, 50@575V)
- **38** = S2: 1-Ph Hp (5@115V, 10@208V, 15@230V), 3-Ph Hp (20@208V, 25@230V, 50@460V, 60@575V)

Enclosure Type and Size

- **A** = NEMA Type 1 - standard size
- **B** = NEMA Type 1 - large size①
- **C** = NEMA Type 3/3R/4/12 - standard size
- **E** = NEMA Type 4X 304 SS - standard size

Disconnect Type

- **A** = None

Nominal Coil Voltage

- **1** = 24 V AC 50/60Hz
- **2** = 24 V DC
- **3** = 110/120 V AC 50/60Hz
- **4** = 208 V AC 50/60Hz
- **5** = 220/240 V AC 50/60Hz
- **6** = 277 V AC 60Hz
- **7** = 480 V AC 60Hz
- **8** = 600 V AC 60Hz

Overload Relay Type

- **0** = (none)
- **1** = Thermal fixed trip Class 10
- **5** = Solid-state selectable trip Class 5-10-20-30

Overload Relay Amp Range

- **0Y** = No overload relay (contactor)

See amp range selection on page 4/14.

Special

- **Y0** = (none)

Factory modifications (See selection starting on page 4/46.)

① Large size enclosures are not applicable for some configurations.
Refer to product selection tables for specifics.

3RE4 Non-Reversing Starter, 3-Phase, 3-Pole, Thermal or Solid-State Overload Relay

Selection

Ordering Information

- Replace the (●) with the code from the coil table on this page.
- Replace the (□) with the overload relay (OLR) code from this page.
- Replace the (♦♦) with the OLR current adjustment range from pg. 4/92.
- For factory modifications, see page 4/93 – 4/95.
- For accessories, see page 4/96 – 4/97.
- For replacement parts, see page 4/97.
- For dimensions, see page 4/98.
- For wiring diagrams, see page 4/99 – 4/101.

Coil Selection (●)①

Nominal Voltage	Code
24 VAC 50/60 Hz	1
24 VDC	2
110/120 VAC 50/60 Hz	3
208 VAC 50/60 Hz	4
220/240 VAC 50/60 Hz	5
277 VAC 60 Hz	6
480 VAC 60 Hz	7
600 VAC 60 Hz	8

Non-Reversing Starter, 3-Phase, 3-Pole, Thermal or Solid-State Overload Relay, Standard Enclosure

3-Phase Motor Hp Rating per UL				NEMA Type Enclosure (Standard Size)			Unused Auxiliary Contacts		Frame Size	Contactor (for ref. only)
				Type 1 General Purpose, Indoor only	Type 3/3R/4/12 Weatherproof, Watertight, Dust-tight	Type 4X 304 Stain. Steel Watertight, Dust-tight, Corrosion Resistant				
208 V	230 V	460 V	575 V	Catalog Number	Catalog Number	Catalog Number	NO	NC		
1.5	2	3	5	3RE4121–5AA●□–♦♦Y0	3RE4121–5CA●□–♦♦Y0	3RE4121–5EA●□–♦♦Y0	1	0	S00	3RT2015
3	3	7.5	10	3RE4121–7AA●□–♦♦Y0	3RE4121–7CA●□–♦♦Y0	3RE4121–7EA●□–♦♦Y0	1	0	S00	3RT2017
2	3	5	7.5	3RE4122–3AA●□–♦♦Y0	3RE4122–3CA●□–♦♦Y0	3RE4122–3EA●□–♦♦Y0	1	1	S0	3RT2023
3	3	7.5	10	3RE4122–4AA●□–♦♦Y0	3RE4122–4CA●□–♦♦Y0	3RE4122–4EA●□–♦♦Y0	1	1	S0	3RT2024
5	5	10	15	3RE4122–5AA●□–♦♦Y0	3RE4122–5CA●□–♦♦Y0	3RE4122–5EA●□–♦♦Y0	1	1	S0	3RT2025
7.5	7.5	15	20	3RE4122–6AA●□–♦♦Y0	3RE4122–6CA●□–♦♦Y0	3RE4122–6EA●□–♦♦Y0	1	1	S0	3RT2026
10	10	20	25	3RE4122–7AA●□–♦♦Y0	3RE4122–7CA●□–♦♦Y0	3RE4122–7EA●□–♦♦Y0	1	1	S0	3RT2027
10	10	25	25	3RE4122–8AA●□–♦♦Y0	3RE4122–8CA●□–♦♦Y0	3RE4122–8EA●□–♦♦Y0	1	1	S0	3RT2028
10	15	30	40	3RE4123–5AA●□–♦♦Y0	3RE4123–5CA●□–♦♦Y0	3RE4123–5EA●□–♦♦Y0	1	1	S2	3RT2035
15	15	40	50	3RE4123–6AA●□–♦♦Y0	3RE4123–6CA●□–♦♦Y0	3RE4123–6EA●□–♦♦Y0	1	1	S2	3RT2036
20	20	50	50	3RE4123–7AA●□–♦♦Y0	3RE4123–7CA●□–♦♦Y0	3RE4123–7EA●□–♦♦Y0	1	1	S2	3RT2037
20	25	50	60	3RE4123–8AA●□–♦♦Y0	3RE4123–8CA●□–♦♦Y0	3RE4123–8EA●□–♦♦Y0	1	1	S2	3RT2038
				□	□	□				
			Thermal overload relay Class 10 =	1	1	1				
			Solid-state overload relay selectable Class =	5	5	5				

Non-Reversing Starter, 3-Phase, 3-Pole, Thermal or Solid-State Overload Relay, Large Enclosure

3-Phase Motor Hp Rating per UL				NEMA Type Enclosure (Large Size)			Unused Auxiliary Contacts		Frame Size	Contactor (for ref. only)
				Type 1 General Purpose, Indoor only	Type 3/3R/4/12 Weatherproof, Watertight, Dust-tight	Type 4X 304 Stain. Steel Watertight, Dust-tight, Corrosion Resistant				
208 V	230 V	460 V	575 V	Catalog Number	Catalog Number	Catalog Number	NO	NC		
1.5	2	3	5	3RE4121–5BA●□–♦♦Y0	Not applicable — Standard enclosure includes extra mounting space for accessories.		1	0	S00	3RT2015
3	3	7.5	10	3RE4121–7BA●□–♦♦Y0			1	0	S00	3RT2017
2	3	5	7.5	3RE4122–3BA●□–♦♦Y0			1	1	S0	3RT2023
3	3	7.5	10	3RE4122–4BA●□–♦♦Y0			1	1	S0	3RT2024
5	5	10	15	3RE4122–5BA●□–♦♦Y0			1	1	S0	3RT2025
7.5	7.5	15	20	3RE4122–6BA●□–♦♦Y0			1	1	S0	3RT2026
10	10	20	25	3RE4122–7BA●□–♦♦Y0			1	1	S0	3RT2027
10	10	25	25	3RE4122–8BA●□–♦♦Y0			1	1	S0	3RT2028
				□						
			Thermal overload relay Class 10 =	1						
			Solid-state overload relay selectable Class =	5						

① For 3-phase controllers, 208 - 600 V coils will be wired for incoming voltage. 24 and120 V coils will be wired as separate source or control power transformer secondary (if ordered). For single phase controllers, 120 and 240 V coils will be wired for incoming voltage. 24 V coils will be wired as separate source or control power transformer secondary (if ordered). 277 - 600 V coils do not apply.

3RE4 Non-Reversing Starter, 1-Phase, 2-Pole, Thermal Overload Relay

Selection

Ordering Information

- Replace the (●) with the code from the coil table on this page.
- Replace the (□) with the overload relay (OLR) code from this page.
- Replace the (♦♦) with the OLR current adjustment range from pg. 4/92.
- For factory modifications, see page 4/93 – 4/95.
- For accessories, see page 4/96 – 4/97.
- For replacement parts, see page 4/97.
- For dimensions, see page 4/98.
- For wiring diagrams, see page 4/99 – 4/101.

Coil Selection (●)①

Nominal Voltage	Code
24 VAC 50/60 Hz	1
24 VDC	2
110/120 VAC 50/60 Hz	3
208 VAC 50/60 Hz	4
220/240 VAC 50/60 Hz	5
277 VAC 60 Hz	6
480 VAC 60 Hz	7
600 VAC 60 Hz	8

Non-Reversing Starter, Single Phase, 2-Pole, Thermal Overload Relay, Standard Enclosure

1-Phase Motor Hp Rating per UL			NEMA Type Enclosure (Standard Size)			Unused Auxiliary Contacts		Frame Size	Contactor (for ref. only)
			Type 1 General Purpose, Indoor only	Type 3/3R/4/12 Weatherproof, Watertight, Dust-tight	Type 4X 304 Stain. Steel Watertight, Dust-tight, Corrosion Resistant				
115 V	208 V	230 V	Catalog Number	Catalog Number	Catalog Number	NO	NC		
0.25	0.5	0.75	**3RE4111–5AA●1–♦♦Y0**	**3RE4111–5CA●1–♦♦Y0**	**3RE4111–5EA●1–♦♦Y0**	1	0	S00	3RT2015
0.5	1.5	2	**3RE4111–7AA●1–♦♦Y0**	**3RE4111–7CA●1–♦♦Y0**	**3RE4111–7EA●1–♦♦Y0**	1	0	S00	3RT2017
1	1	1	**3RE4112–3AA●1–♦♦Y0**	**3RE4112–3CA●1–♦♦Y0**	**3RE4112–3EA●1–♦♦Y0**	1	1	S0	3RT2023
1	2	2	**3RE4112–4AA●1–♦♦Y0**	**3RE4112–4CA●1–♦♦Y0**	**3RE4112–4EA●1–♦♦Y0**	1	1	S0	3RT2024
1	2	3	**3RE4112–5AA●1–♦♦Y0**	**3RE4112–5CA●1–♦♦Y0**	**3RE4112–5EA●1–♦♦Y0**	1	1	S0	3RT2025
2	3	3	**3RE4112–6AA●1–♦♦Y0**	**3RE4112–6CA●1–♦♦Y0**	**3RE4112–6EA●1–♦♦Y0**	1	1	S0	3RT2026
2	5	5	**3RE4112–7AA●1–♦♦Y0**	**3RE4112–7CA●1–♦♦Y0**	**3RE4112–7EA●1–♦♦Y0**	1	1	S0	3RT2027
3	5	5	**3RE4112–8AA●1–♦♦Y0**	**3RE4112–8CA●1–♦♦Y0**	**3RE4112–8EA●1–♦♦Y0**	1	1	S0	3RT2028
3	5	7.5	**3RE4113–5AA●1–♦♦Y0**	**3RE4113–5CA●1–♦♦Y0**	**3RE4113–5EA●1–♦♦Y0**	1	1	S2	3RT2035
3	7	10	**3RE4113–6AA●1–♦♦Y0**	**3RE4113–6CA●1–♦♦Y0**	**3RE4113–6EA●1–♦♦Y0**	1	1	S2	3RT2036
5	10	10	**3RE4113–7AA●1–♦♦Y0**	**3RE4113–7CA●1–♦♦Y0**	**3RE4113–7EA●1–♦♦Y0**	1	1	S2	3RT2037
5	10	15	**3RE4113–8AA●1–♦♦Y0**	**3RE4113–8CA●1–♦♦Y0**	**3RE4113–8EA●1–♦♦Y0**	1	1	S2	3RT2038

Non-Reversing Starter, Single Phase, 2-Pole, Thermal Overload Relay, Large Enclosure

1-Phase Motor Hp Rating per UL			NEMA Type Enclosure (Large Size)			Unused Auxiliary Contacts		Frame Size	Contactor (for ref. only)
			Type 1 General Purpose, Indoor only	Type 3/3R/4/12 Weatherproof, Watertight, Dust-tight	Type 4X 304 Stain. Steel Watertight, Dust-tight, Corrosion Resistant				
115 V	208 V	230 V	Catalog Number	Catalog Number	Catalog Number	NO	NC		
0.25	0.5	0.75	**3RE4111–5BA●1–♦♦Y0**	Not applicable — Standard enclosure includes extra mounting space for accessories.		1	0	S00	3RT2015
0.5	1.5	2	**3RE4111–7BA●1–♦♦Y0**			1	0	S00	3RT2017
1	1	1	**3RE4112–3BA●1–♦♦Y0**			1	1	S0	3RT2023
1	2	2	**3RE4112–4BA●1–♦♦Y0**			1	1	S0	3RT2024
1	2	3	**3RE4112–5BA●1–♦♦Y0**			1	1	S0	3RT2025
2	3	3	**3RE4112–6BA●1–♦♦Y0**			1	1	S0	3RT2026
2	5	5	**3RE4112–7BA●1–♦♦Y0**			1	1	S0	3RT2027
3	5	5	**3RE4112–8BA●1–♦♦Y0**			1	1	S0	3RT2028

① For 3-phase controllers, 208 - 600 V coils will be wired for incoming voltage. 24 and120 V coils will be wired as separate source or control power transformer secondary (if ordered). For single phase controllers, 120 and 240 V coils will be wired for incoming voltage. 24 V coils will be wired as separate source or control power transformer secondary (if ordered). 277 - 600 V coils do not apply.

3RE4 Reversing Starter, 3-Phase, 3-Pole, Thermal or Solid-State Overload Relay

Selection

Ordering Information

- Replace the (●) with the code from the coil table on this page.
- Replace the (□) with the overload relay (OLR) code from this page.
- Replace the (♦♦) with the OLR current adjustment range from pg. 4/92.
- For factory modifications, see page 4/93 – 4/95.
- For accessories, see page 4/96 – 4/97.
- For replacement parts, see page 4/97.
- For dimensions, see page 4/98.
- For wiring diagrams, see page 4/99 – 4/101.

Coil Selection (●)①

Nominal Voltage	Code
24 VAC 50/60 Hz	1
24 VDC	2
110/120 VAC 50/60 Hz	3
208 VAC 50/60 Hz	4
220/240 VAC 50/60 Hz	5
277 VAC 60 Hz	6
480 VAC 60 Hz	7
600 VAC 60 Hz	8

Reversing Starter, 3-Phase, 3-Pole, Thermal or Solid-State Overload Relay, Standard Enclosure

3-Phase Motor Hp Rating per UL				NEMA Type Enclosure (Standard Size)			Unused Auxiliary Contacts		Frame Size	Contactor (for ref. only)
				Type 1 General Purpose, Indoor only	Type 3/3R/4/12 Weatherproof, Watertight, Dust-tight	Type 4X 304 Stain. Steel Watertight, Dust-tight, Corrosion Resistant				
208 V	230 V	460 V	575 V	Catalog Number	Catalog Number	Catalog Number	NO	NC		
1.5	2	3	5	**3RE4141–5AA●□–♦♦Y0**	**3RE4141–5CA●□–♦♦Y0**	**3RE4141–5EA●□–♦♦Y0**	2	2	S00	3RA2315
3	3	7.5	10	**3RE4141–7AA●□–♦♦Y0**	**3RE4141–7CA●□–♦♦Y0**	**3RE4141–7EA●□–♦♦Y0**	2	2	S00	3RA2317
2	3	5	7.5	**3RE4142–3AA●□–♦♦Y0**	**3RE4142–3CA●□–♦♦Y0**	**3RE4142–3EA●□–♦♦Y0**	2	0	S0	3RA2323
3	3	7.5	10	**3RE4142–4AA●□–♦♦Y0**	**3RE4142–4CA●□–♦♦Y0**	**3RE4142–4EA●□–♦♦Y0**	2	0	S0	3RA2324
5	5	10	15	**3RE4142–5AA●□–♦♦Y0**	**3RE4142–5CA●□–♦♦Y0**	**3RE4142–5EA●□–♦♦Y0**	2	0	S0	3RA2325
7.5	7.5	15	20	**3RE4142–6AA●□–♦♦Y0**	**3RE4142–6CA●□–♦♦Y0**	**3RE4142–6EA●□–♦♦Y0**	2	0	S0	3RA2326
10	10	20	25	**3RE4142–7AA●□–♦♦Y0**	**3RE4142–7CA●□–♦♦Y0**	**3RE4142–7EA●□–♦♦Y0**	2	0	S0	3RA2327
10	10	25	25	**3RE4142–8AA●□–♦♦Y0**	**3RE4142–8CA●□–♦♦Y0**	**3RE4142–8EA●□–♦♦Y0**	2	0	S0	3RA2328
10	15	30	40	**3RE4143–5AA●□–♦♦Y0**	**3RE4143–5CA●□–♦♦Y0**	**3RE4143–5EA●□–♦♦Y0**	2	0	S2	3RA2335
15	15	40	50	**3RE4143–6AA●□–♦♦Y0**	**3RE4143–6CA●□–♦♦Y0**	**3RE4143–6EA●□–♦♦Y0**	2	0	S2	3RA2336
20	20	50	50	**3RE4143–7AA●□–♦♦Y0**	**3RE4143–7CA●□–♦♦Y0**	**3RE4143–7EA●□–♦♦Y0**	2	0	S2	3RA2337
20	25	50	60	**3RE4143–8AA●□–♦♦Y0**	**3RE4143–8CA●□–♦♦Y0**	**3RE4143–8EA●□–♦♦Y0**	2	0	S2	3RA2338
				□	□	□				
			Thermal overload relay Class 10 =	**1**	**1**	**1**				
			Solid-state overload relay selectable Class =	**5**	**5**	**5**				

Reversing Starter, 3-Phase, 3-Pole, Thermal or Solid-State Overload Relay, Large Enclosure

3-Phase Motor Hp Rating per UL				NEMA Type Enclosure (Large Size)			Unused Auxiliary Contacts		Frame Size	Contactor (for ref. only)
				Type 1 General Purpose, Indoor only	Type 3/3R/4/12 Weatherproof, Watertight, Dust-tight	Type 4X 304 Stain. Steel Watertight, Dust-tight, Corrosion Resistant				
208 V	230 V	460 V	575 V	Catalog Number	Catalog Number	Catalog Number	NO	NC		
1.5	2	3	5	**3RE4141–5BA●□–♦♦Y0**	Not applicable — Standard enclosure includes extra mounting space for accessories.		2	0	S00	3RA2315
3	3	7.5	10	**3RE4141–7BA●□–♦♦Y0**			2	0	S00	3RA2317
2	3	5	7.5	**3RE4142–3BA●□–♦♦Y0**			2	0	S0	3RA2323
3	3	7.5	10	**3RE4142–4BA●□–♦♦Y0**			2	0	S0	3RA2324
5	5	10	15	**3RE4142–5BA●□–♦♦Y0**			2	0	S0	3RA2325
7.5	7.5	15	20	**3RE4142–6BA●□–♦♦Y0**			2	0	S0	3RA2326
10	10	20	25	**3RE4142–7BA●□–♦♦Y0**			2	0	S0	3RA2327
10	10	25	25	**3RE4142–8BA●□–♦♦Y0**			2	0	S0	3RA2328
				□						
			Thermal overload relay Class 10 =	**1**						
			Solid-state overload relay selectable Class =	**5**						

① For 3-phase controllers, 208 - 600 V coils will be wired for incoming voltage. 24 and120 V coils will be wired as separate source or control power transformer secondary (if ordered). For single phase controllers, 120 and 240 V coils will be wired for incoming voltage. 24 V coils will be wired as separate source or control power transformer secondary (if ordered). 277 - 600 V coils do not apply.

3RE4 Non-Reversing Contactor, 3-Pole (for both 1-Phase and 3-Phase)

Selection

Ordering Information

- Replace the (●) with the code from the coil table on this page.
- For factory modifications, see page 4/93 – 4/95.
- For accessories, see page 4/96 – 4/97.
- For replacement parts, see page 4/97.
- For dimensions, see page 4/98.
- For wiring diagrams, see page 4/99 – 4/101.

Coil Selection (●)①

Nominal Voltage	Code
24 VAC 50/60 Hz	1
24 VDC	2
110/120 VAC 50/60 Hz	3
208 VAC 50/60 Hz	4
220/240 VAC 50/60 Hz	5
277 VAC 60 Hz	6
480 VAC 60 Hz	7
600 VAC 60 Hz	8

Non-Reversing Contactor, 3-Pole (for both 1-Phase and 3-Phase), Standard Enclosure

1-Phase Motor Hp Rating per UL			3-Phase Motor Hp Rating per UL				NEMA Type Enclosure (Standard Size)			Unused Auxiliary Contacts		Frame Size	Contactor (for ref. only)
							Type 1 General Purpose, Indoor only	Type 3/3R/4/12 Weatherproof, Watertight, Dust-tight	Type 4X 304 Stain. Steel Watertight, Dust-tight, Corrosion Resistant				
115V	208V	230V	208V	230V	460V	575V	Catalog Number	Catalog Number	Catalog Number	NO	NC		
0.25	0.5	0.75	1.5	2	3	5	**3RE4161–5AA●0–0YY0**	**3RE4161–5CA●0–0YY0**	**3RE4161–5EA●0–0YY0**	1	0	S00	3RT2015
0.5	1.5	2	3	3	7.5	10	**3RE4161–7AA●0–0YY0**	**3RE4161–7CA●0–0YY0**	**3RE4161–7EA●0–0YY0**	1	0	S00	3RT2017
1	1	1	2	3	5	7.5	**3RE4162–3AA●0–0YY0**	**3RE4162–3CA●0–0YY0**	**3RE4162–3EA●0–0YY0**	1	1	S0	3RT2023
1	2	2	3	3	7.5	10	**3RE4162–4AA●0–0YY0**	**3RE4162–4CA●0–0YY0**	**3RE4162–4EA●0–0YY0**	1	1	S0	3RT2024
1	2	3	5	5	10	15	**3RE4162–5AA●0–0YY0**	**3RE4162–5CA●0–0YY0**	**3RE4162–5EA●0–0YY0**	1	1	S0	3RT2025
2	3	3	7.5	7.5	15	20	**3RE4162–6AA●0–0YY0**	**3RE4162–6CA●0–0YY0**	**3RE4162–6EA●0–0YY0**	1	1	S0	3RT2026
2	5	5	10	10	20	25	**3RE4162–7AA●0–0YY0**	**3RE4162–7CA●0–0YY0**	**3RE4162–7EA●0–0YY0**	1	1	S0	3RT2027
3	5	5	10	10	25	25	**3RE4162–8AA●0–0YY0**	**3RE4162–8CA●0–0YY0**	**3RE4162–8EA●0–0YY0**	1	1	S0	3RT2028
3	5	7.5	10	15	30	40	**3RE4163–5AA●0–0YY0**	**3RE4163–5CA●0–0YY0**	**3RE4163–5EA●0–0YY0**	1	1	S2	3RT2035
3	7	10	15	15	40	50	**3RE4163–6AA●0–0YY0**	**3RE4163–6CA●0–0YY0**	**3RE4163–6EA●0–0YY0**	1	1	S2	3RT2036
5	10	10	20	20	50	50	**3RE4163–7AA●0–0YY0**	**3RE4163–7CA●0–0YY0**	**3RE4163–7EA●0–0YY0**	1	1	S2	3RT2037
5	10	15	20	25	50	60	**3RE4163–8AA●0–0YY0**	**3RE4163–8CA●0–0YY0**	**3RE4163–8EA●0–0YY0**	1	1	S2	3RT2038

Non-Reversing Contactor, 3-Pole (for both 1-Phase and 3-Phase), Large Enclosure

1-Phase Motor Hp Rating per UL			3-Phase Motor Hp Rating per UL				NEMA Type Enclosure (Large Size)			Unused Auxiliary Contacts		Frame Size	Contactor (for ref. only)
							Type 1 General Purpose, Indoor only	Type 3/3R/4/12 Weatherproof, Watertight, Dust-tight	Type 4X 304 Stain. Steel Watertight, Dust-tight, Corrosion Resistant				
115V	208V	230V	208V	230V	460V	575V	Catalog Number	Catalog Number	Catalog Number	NO	NC		
0.25	0.5	0.75	1.5	2	3	5	**3RE4161–5BA●0–0YY0**	Not applicable — Standard enclosure includes extra mounting space for accessories.		1	0	S00	3RT2015
0.5	1.5	2	3	3	7.5	10	**3RE4161–7BA●0–0YY0**			1	0	S00	3RT2017
1	1	1	2	3	5	7.5	**3RE4162–3BA●0–0YY0**			1	1	S0	3RT2023
1	2	2	3	3	7.5	10	**3RE4162–4BA●0–0YY0**			1	1	S0	3RT2024
1	2	3	5	5	10	15	**3RE4162–5BA●0–0YY0**			1	1	S0	3RT2025
2	3	3	7.5	7.5	15	20	**3RE4162–6BA●0–0YY0**			1	1	S0	3RT2026
2	5	5	10	10	20	25	**3RE4162–7BA●0–0YY0**			1	1	S0	3RT2027
3	5	5	10	10	25	25	**3RE4162–8BA●0–0YY0**			1	1	S0	3RT2028

① For 3-phase controllers, 208 - 600 V coils will be wired for incoming voltage. 24 and120 V coils will be wired as separate source or control power transformer secondary (if ordered). For single phase controllers, 120 and 240 V coils will be wired for incoming voltage. 24 V coils will be wired as separate source or control power transformer secondary (if ordered). 277 - 600 V coils do not apply.

3RE4 Reversing Contactor, 3-Pole (for both 1-Phase and 3-Phase)

Selection

Ordering Information

- Replace the (●) with the code from the coil table on this page.
- For factory modifications, see page 4/93 – 4/95.
- For accessories, see page 4/96 – 4/97.
- For replacement parts, see page 4/97.
- For dimensions, see page 4/98.
- For wiring diagrams, see page 4/99 – 4/101.

Coil Selection (●)①

Nominal Voltage	Code
24 VAC 50/60 Hz	1
24 VDC	2
110/120 VAC 50/60 Hz	3
208 VAC 50/60 Hz	4
220/240 VAC 50/60 Hz	5
277 VAC 60 Hz	6
480 VAC 60 Hz	7
600 VAC 60 Hz	8

Reversing Contactor, 3-Pole (for both 1-Phase and 3-Phase), Standard Enclosure

1-Phase Motor Hp Rating per UL		3-Phase Motor Hp Rating per UL				NEMA Type Enclosure (Standard Size)			Unused Auxiliary Contacts		Frame Size	Contactor (for ref. only)
						Type 1 General Purpose, Indoor only	Type 3/3R/4/12 Weatherproof, Watertight, Dust-tight	Type 4X 304 Stain. Steel Watertight, Dust-tight, Corrosion Resistant				
115V	230V	208V	230V	460V	575V	Catalog Number	Catalog Number	Catalog Number	NO	NC		
0.25	0.75	1.5	2	3	5	**3RE4181–5AA●0–0YY0**	**3RE4181–5CA●0–0YY0**	**3RE4181–5EA●0–0YY0**	2	2	S00	3RA2315
0.5	2	3	3	7.5	10	**3RE4181–7AA●0–0YY0**	**3RE4181–7CA●0–0YY0**	**3RE4181–7EA●0–0YY0**	2	0	S00	3RA2317
1	1	2	3	5	7.5	**3RE4182–3AA●0–0YY0**	**3RE4182–3CA●0–0YY0**	**3RE4182–3EA●0–0YY0**	2	0	S0	3RA2323
1	2	3	3	7.5	10	**3RE4182–4AA●0–0YY0**	**3RE4182–4CA●0–0YY0**	**3RE4182–4EA●0–0YY0**	2	0	S0	3RA2324
1	3	5	5	10	15	**3RE4182–5AA●0–0YY0**	**3RE4182–5CA●0–0YY0**	**3RE4182–5EA●0–0YY0**	2	0	S0	3RA2325
2	3	7.5	7.5	15	20	**3RE4182–6AA●0–0YY0**	**3RE4182–6CA●0–0YY0**	**3RE4182–6EA●0–0YY0**	2	0	S0	3RA2326
2	5	10	10	20	25	**3RE4182–7AA●0–0YY0**	**3RE4182–7CA●0–0YY0**	**3RE4182–7EA●0–0YY0**	2	0	S0	3RA2327
3	5	10	10	25	25	**3RE4182–8AA●0–0YY0**	**3RE4182–8CA●0–0YY0**	**3RE4182–8EA●0–0YY0**	2	0	S0	3RA2328
3	7.5	10	15	30	40	**3RE4183–5AA●0–0YY0**	**3RE4183–5CA●0–0YY0**	**3RE4183–5EA●0–0YY0**	2	0	S2	3RA2335
3	10	15	15	40	50	**3RE4183–6AA●0–0YY0**	**3RE4183–6CA●0–0YY0**	**3RE4183–6EA●0–0YY0**	2	0	S2	3RA2336
5	10	20	20	50	50	**3RE4183–7AA●0–0YY0**	**3RE4183–7CA●0–0YY0**	**3RE4183–7EA●0–0YY0**	2	0	S2	3RA2337
5	15	20	25	50	60	**3RE4183–8AA●0–0YY0**	**3RE4183–8CA●0–0YY0**	**3RE4183–8EA●0–0YY0**	2	0	S2	3RA2338

Reversing Contactor, 3-Pole (for both 1-Phase and 3-Phase), Large Enclosure

1-Phase Motor Hp Rating per UL		3-Phase Motor Hp Rating per UL				NEMA Type Enclosure (Large Size)			Unused Auxiliary Contacts		Frame Size	Contactor (for ref. only)
						Type 1 General Purpose, Indoor only	Type 3/3R/4/12 Weatherproof, Watertight, Dust-tight	Type 4X 304 Stain. Steel Watertight, Dust-tight, Corrosion Resistant				
115V	230V	208V	230V	460V	575V	Catalog Number	Catalog Number	Catalog Number	NO	NC		
0.25	0.75	1.5	2	3	5	**3RE4181–5BA●0–0YY0**	Not applicable — Standard enclosure includes extra mounting space for accessories.		2	0	S00	3RA2315
0.5	2	3	3	7.5	10	**3RE4181–7BA●0–0YY0**			2	0	S00	3RA2317
1	1	2	3	5	7.5	**3RE4182–3BA●0–0YY0**			2	0	S0	3RA2323
1	2	3	3	7.5	10	**3RE4182–4BA●0–0YY0**			2	0	S0	3RA2324
1	3	5	5	10	15	**3RE4182–5BA●0–0YY0**			2	0	S0	3RA2325
2	3	7.5	7.5	15	20	**3RE4182–6BA●0–0YY0**			2	0	S0	3RA2326
2	5	10	10	20	25	**3RE4182–7BA●0–0YY0**			2	0	S0	3RA2327
3	5	10	10	25	25	**3RE4182–8BA●0–0YY0**			2	0	S0	3RA2328

① For 3-phase controllers, 208 - 600 V coils will be wired for incoming voltage. 24 and120 V coils will be wired as separate source or control power transformer secondary (if ordered). For single phase controllers, 120 and 240 V coils will be wired for incoming voltage. 24 V coils will be wired as separate source or control power transformer secondary (if ordered). 277 - 600 V coils do not apply.

Selection Tables for 3RE4 Overload Relays

Thermal Overload Relay

Solid-State Overload Relay

Selection Information

- Replace the (♦♦) within the incomplete 3RE4 catalog number with a code selected from the tables below. The frame size must match that of the 3RE4 product.

Thermal Overload Relays, Trip Class 10, Single and Three Phase

Features and technical characteristics:

- Phase failure sensitivity
- Includes NC trip contact and NO alarm contact
- Manual and automatic RESET (selectable)
- Switch position indicator
- TEST function
- STOP button
- Sealable cover (optional)
- Screw-type terminals

Current Adjustment Range (Amp)	Code ♦♦	Thermal Overload Relay (reference only)
Frame Size S00		
0.7 - 1	0J	**3RU2116-0JB0**
0.9 - 1.25	0K	**3RU2116-0KB0**
1.1 - 1.6	1A	**3RU2116-1AB0**
1.4 - 2	1B	**3RU2116-1BB0**
1.8 - 2.5	1C	**3RU2116-1CB0**
2.2 - 3.2	1D	**3RU2116-1DB0**
2.8 - 4	1E	**3RU2116-1EB0**
3.5 - 5	1F	**3RU2116-1FB0**
4.5 - 6.3	1G	**3RU2116-1GB0**
5.5 - 8	1H	**3RU2116-1HB0**
7 - 10	1J	**3RU2116-1JB0**
9 - 12.5	1K	**3RU2116-1KB0**
11 - 16	4A	**3RU2116-4AB0**

Current Adjustment Range (Amp)	Code ♦♦	Thermal Overload Relay (reference only)
Frame Size S0		
1.8 - 2.5	1C	**3RU2126-1CB0**
2.2 - 3.2	1D	**3RU2126-1DB0**
2.8 - 4	1E	**3RU2126-1EB0**
3.5 - 5	1F	**3RU2126-1FB0**
4.5 - 6.3	1G	**3RU2126-1GB0**
5.5 - 8	1H	**3RU2126-1HB0**
7 - 10	1J	**3RU2126-1JB0**
9 - 12.5	1K	**3RU2126-1KB0**
11 - 16	4A	**3RU2126-4AB0**
14 - 20	4B	**3RU2126-4BB0**
17 - 22	4C	**3RU2126-4CB0**
20 - 25	4D	**3RU2126-4DB0**
23 - 28	4N	**3RU2126-4NB0**
27 - 32	4E	**3RU2126-4EB0**
30 - 36	4P	**3RU2126-4PB0**
34 - 40	4F	**3RU2126-4FB0**

Current Adjustment Range (Amp)	Code ♦♦	Thermal Overload Relay (reference only)
Frame Size S2		
22 - 32	4E	**3RU2136-4EB0**
28 - 40	4F	**3RU2136-4FB0**
36 - 45	4G	**3RU2136-4GB0**
40 - 50	4H	**3RU2136-4HB0**
47 - 57	4Q	**3RU2136-4QB0**
54 - 65	4J	**3RU2136-4JB0**
62 - 73	4K	**3RU2136-4KB0**
70 - 80	4R	**3RU2136-4RB0**

Solid-State Overload Relays, Selectable Trip Class 5, 10, 20 and 30, Three Phase Only

Features and technical characteristics:

- Overload, phase failure and unbalance protection
- Internal ground fault detection (selectable)
- Internal power supply
- Includes NC trip contact and NO alarm contact
- Manual and automatic RESET (selectable)
- Electrical remote RESET integrated
- Switch position indicator
- TEST function and self-monitoring
- Sealable cover (optional)
- Screw-type terminals

Current Adjustment Range (Amp)	Code ♦♦	Solid-State Overload Relay (reference only)
Frame Size S00		
0.32 - 1.25	4N	**3RB3113-4NB0**
1 - 4	4P	**3RB3113-4PB0**
3 - 12	4S	**3RB3113-4SB0**
4 - 16	4T	**3RB3113-4TB0**

Current Adjustment Range (Amp)	Code ♦♦	Solid-State Overload Relay (reference only)
Frame Size S0		
0.32 - 1.25	4N	**3RB3123-4NB0**
1 - 4	4P	**3RB3123-4PB0**
3 - 12	4S	**3RB3123-4SB0**
6 - 25	4Q	**3RB3123-4QB0**
10 - 40	4V	**3RB3123-4VB0**

Current Adjustment Range (Amp)	Code ♦♦	Solid-State Overload Relay (reference only)
Frame Size S2		
12 - 50	4U	**3RB3133-4UB0**
20 - 80	4W	**3RB3133-4WB0**

3RE4 Factory Modifications

Selection Information

- These tables apply to 3RE4 products.
- Replace the last two characters of the 3RE4 catalog number (Y0), with a code selected from the tables below.

Start-Stop Push Button Combinations

Description	Code (Y0)	Restrictions
(No modifications included)	Y0	—
Start-Stop Push Buttons	B0	1
Start-Stop Push Buttons, Red On Pilot Light	B1	1
Start-Stop Push Buttons, Red On Pilot Light, Green Off Pilot Light	B2	1
Start-Stop Push Buttons, CPT Std Capacity① 208:120V	B3	1 and 2
Start-Stop Push Buttons, CPT Std Capacity① 208:120V, Red On Pilot Light	B4	1 and 2
Start-Stop Push Buttons, CPT Std Capacity① 208:120V, Red On Pilot Light, Green Off Pilot Light	B5	1 and 2
Start-Stop Push Buttons, CPT Std Capacity① 208:24V	B6	1 and 3
Start-Stop Push Buttons, CPT Std Capacity① 208:24V, Red On Pilot Light	B7	1 and 3
Start-Stop Push Buttons, CPT Std Capacity① 208:24V, Red On Pilot Light, Green Off Pilot Light	B8	1 and 3
Start-Stop Push Buttons, CPT Std Capacity① 240:120V	C0	1 and 2
Start-Stop Push Buttons, CPT Std Capacity① 240:120V, Red On Pilot Light	C1	1 and 2
Start-Stop Push Buttons, CPT Std Capacity① 240:120V, Red On Pilot Light, Green Off Pilot Light	C2	1 and 2
Start-Stop Push Buttons, CPT Std Capacity① 240:24V	C3	1 and 3
Start-Stop Push Buttons, CPT Std Capacity① 240:24V, Red On Pilot Light	C4	1 and 3
Start-Stop Push Buttons, CPT Std Capacity① 240:24V, Red On Pilot Light, Green Off Pilot Light	C5	1 and 3
Start-Stop Push Buttons, CPT Std Capacity① 480/240:120V	C6	1, 2 and 4
Start-Stop Push Buttons, CPT Std Capacity① 480/240:120V, Red On Pilot Light	C7	1, 2 and 4
Start-Stop Push Buttons, CPT Std Capacity① 480/240:120V, Red On Pilot Light, Green Off Pilot Light	C8	1, 2 and 4
Start-Stop Push Buttons, CPT Std Capacity① 480/240:24V	D0	1, 3 and 4
Start-Stop Push Buttons, CPT Std Capacity① 480/240:24V, Red On Pilot Light	D1	1, 3 and 4
Start-Stop Push Buttons, CPT Std Capacity① 480/240:24V, Red On Pilot Light, Green Off Pilot Light	D2	1, 3 and 4
Start-Stop Push Buttons, CPT Std Capacity① 600:120V, Red On Pilot Light	P0	1, 2 and 4
Start-Stop Push Buttons, CPT Std Capacity① 600:24V, Red On Pilot Light	P2	1, 3 and 4

Fwd-Rev-Stop Push Button Combinations

Description	Code (Y0)	Restrictions
(No modifications included)	Y0	—
Fwd-Rev-Stop Push Buttons	D3	5
Fwd-Rev-Stop Push Buttons, Red On Pilot Light	D4	5
Fwd-Rev-Stop Push Buttons, Red On Pilot Light, Green Off Pilot Light	D5	5
Fwd-Rev-Stop Push Buttons, CPT Std Capacity① 208:120V	D6	2 and 5
Fwd-Rev-Stop Push Buttons, CPT Std Capacity① 208:120V, Red On Pilot Light	D7	2 and 5
Fwd-Rev-Stop Push Buttons, CPT Std Capacity① 208:120V, Red On Pilot Light, Green Off Pilot Light	D8	2 and 5
Fwd-Rev-Stop Push Buttons, CPT Std Capacity① 208:24V	E0	3 and 5
Fwd-Rev-Stop Push Buttons, CPT Std Capacity① 208:24V, Red On Pilot Light	E1	3 and 5
Fwd-Rev-Stop Push Buttons, CPT Std Capacity① 208:24V, Red On Pilot Light, Green Off Pilot Light	E2	3 and 5
Fwd-Rev-Stop Push Buttons, CPT Std Capacity① 240:120V	E3	2 and 5
Fwd-Rev-Stop Push Buttons, CPT Std Capacity① 240:120V, Red On Pilot Light	E4	2 and 5
Fwd-Rev-Stop Push Buttons, CPT Std Capacity① 240:120V, Red On Pilot Light, Green Off Pilot Light	E5	2 and 5
Fwd-Rev-Stop Push Buttons, CPT Std Capacity① 240:24V	E6	3 and 5
Fwd-Rev-Stop Push Buttons, CPT Std Capacity① 240:24V, Red On Pilot Light	E7	3 and 5
Fwd-Rev-Stop Push Buttons, CPT Std Capacity① 240:24V, Red On Pilot Light, Green Off Pilot Light	E8	3 and 5
Fwd-Rev-Stop Push Buttons, CPT Std Capacity① 480/240:120V	F0	2, 4 and 5
Fwd-Rev-Stop Push Buttons, CPT Std Capacity① 480/240:120V, Red On Pilot Light	F1	2, 4 and 5
Fwd-Rev-Stop Push Buttons, CPT Std Capacity① 480/240:120V, Red On Pilot Light, Green Off Pilot Light	F2	2, 4 and 5
Fwd-Rev-Stop Push Buttons, CPT Std Capacity① 480/240:24V	F3	3, 4 and 5
Fwd-Rev-Stop Push Buttons, CPT Std Capacity① 480/240:24V, Red On Pilot Light	F4	3, 4 and 5
Fwd-Rev-Stop Push Buttons, CPT Std Capacity① 480/240:24V, Red On Pilot Light, Green Off Pilot Light	F5	3, 4 and 5

Restrictions:

1. Valid only with non-reversing controllers.
2. Valid only with 120 V coil.
3. Valid only with 24 VAC coil.
4. Not valid with single-phase controllers.
5. Not valid in NEMA Type 1 enclosures.

① A CPT in a NEMA type 1 enclosure with a size S00 or S0 controller requires a large size enclosure. A CPT in a NEMA type 1 enclosure with a size S2 controller requires a standard size enclosure. All other enclosure types may be standard size.

3RE4 Factory Modifications

Selection

Selection Information

- These tables apply to 3RE4 products.
- Replace the last two characters of the 3RE4 catalog number (Y0), with a code selected from the tables below.

Hand-Off-Auto Selector Switch Combinations

Description	Code (Y0)	Restrictions
(No modifications included)	Y0	—
Hand-Off-Auto Selector Switch	F6	1
Hand-Off-Auto Selector Switch, Red On Pilot Light	F7	1
Hand-Off-Auto Selector Switch, Red On Pilot Light, Green Off Pilot Light	F8	1
Hand-Off-Auto Selector Switch, CPT Std Capacity① 208:120V	G0	1 and 2
Hand-Off-Auto Selector Switch, CPT Std Capacity① 208:120V, Red On Pilot Light	G1	1 and 2
Hand-Off-Auto Selector Switch, CPT Std Capacity① 208:120V, Red On Pilot Light, Green Off Pilot Light	G2	1 and 2
Hand-Off-Auto Selector Switch, CPT Std Capacity① 208:24V	G3	1 and 3
Hand-Off-Auto Selector Switch, CPT Std Capacity① 208:24V, Red On Pilot Light	G4	1 and 3
Hand-Off-Auto Selector Switch, CPT Std Capacity① 208:24V, Red On Pilot Light, Green Off Pilot Light	G5	1 and 3
Hand-Off-Auto Selector Switch, CPT Std Capacity① 240:120V	G6	1 and 2
Hand-Off-Auto Selector Switch, CPT Std Capacity① 240:120V, Red On Pilot Light	G7	1 and 2
Hand-Off-Auto Selector Switch, CPT Std Capacity① 240:120V, Red On Pilot Light, Green Off Pilot Light	G8	1 and 2
Hand-Off-Auto Selector Switch, CPT Std Capacity① 240:24V	H0	1 and 3
Hand-Off-Auto Selector Switch, CPT Std Capacity① 240:24V, Red On Pilot Light	H1	1 and 3
Hand-Off-Auto Selector Switch, CPT Std Capacity① 240:24V, Red On Pilot Light, Green Off Pilot Light	H2	1 and 3
Hand-Off-Auto Selector Switch, CPT Std Capacity① 480/240:120V	H3	1, 2 and 4
Hand-Off-Auto Selector Switch, CPT Std Capacity① 480/240:120V, Red On Pilot Light	H4	1, 2 and 4
Hand-Off-Auto Selector Switch, CPT Std Capacity① 480/240:120V, Red On Pilot Light, Green Off Pilot Light	H5	1, 2 and 4
Hand-Off-Auto Selector Switch, CPT Std Capacity① 480/240:24V	H6	1, 3 and 4
Hand-Off-Auto Selector Switch, CPT Std Capacity① 480/240:24V, Red On Pilot Light	H7	1, 3 and 4
Hand-Off-Auto Selector Switch, CPT Std Capacity① 480/240:24V, Red On Pilot Light, Green Off Pilot Light	H8	1, 3 and 4
Hand-Off-Auto Selector Switch, CPT Std Capacity① 600:120V, Red On Pilot Light	P1	1, 2 and 4
Hand-Off-Auto Selector Switch, CPT Std Capacity① 600:24V, Red On Pilot Light	P3	1, 3 and 4

On-Off Selector Switch Combinations

Description	Code (Y0)	Restrictions
(No modifications included)	Y0	—
On-Off Selector Switch	J0	1
On-Off Selector Switch, Red On Pilot Light	J1	1
On-Off Selector Switch, Red On Pilot Light, Green Off Pilot Light	J2	1
On-Off Selector Switch, CPT Std Capacity① 208:120V	J3	1 and 2
On-Off Selector Switch, CPT Std Capacity① 208:120V, Red On Pilot Light	J4	1 and 2
On-Off Selector Switch, CPT Std Capacity① 208:120V, Red On Pilot Light, Green Off Pilot Light	J5	1 and 2
On-Off Selector Switch, CPT Std Capacity① 208:24V	J6	1 and 3
On-Off Selector Switch, CPT Std Capacity① 208:24V, Red On Pilot Light	J7	1 and 3
On-Off Selector Switch, CPT Std Capacity① 208:24V, Red On Pilot Light, Green Off Pilot Light	J8	1 and 3
On-Off Selector Switch, CPT Std Capacity① 240:120V	K0	1 and 2
On-Off Selector Switch, CPT Std Capacity① 240:120V, Red On Pilot Light	K1	1 and 2
On-Off Selector Switch, CPT Std Capacity① 240:120V, Red On Pilot Light, Green Off Pilot Light	K2	1 and 2
On-Off Selector Switch, CPT Std Capacity① 240:24V	K3	1 and 3
On-Off Selector Switch, CPT Std Capacity① 240:24V, Red On Pilot Light	K4	1 and 3
On-Off Selector Switch, CPT Std Capacity① 240:24V, Red On Pilot Light, Green Off Pilot Light	K5	1 and 3
On-Off Selector Switch, CPT Std Capacity① 480/240:120V	K6	1, 2 and 4
On-Off Selector Switch, CPT Std Capacity① 480/240:120V, Red On Pilot Light	K7	1, 2 and 4
On-Off Selector Switch, CPT Std Capacity① 480/240:120V, Red On Pilot Light, Green Off Pilot Light	K8	1, 2 and 4
On-Off Selector Switch, CPT Std Capacity① 480/240:24V	L0	1, 3 and 4
On-Off Selector Switch, CPT Std Capacity① 480/240:24V, Red On Pilot Light	L1	1, 3 and 4
On-Off Selector Switch, CPT Std Capacity① 480/240:24V, Red On Pilot Light, Green Off Pilot Light	L2	1, 3 and 4

Restrictions:

1. Valid only with non-reversing controllers.
2. Valid only with 120 V coil.
3. Valid only with 24 VAC coil.
4. Not valid with single-phase controllers.

① A CPT in a NEMA type 1 enclosure with a size S00 or S0 controller requires a large size enclosure. A CPT in a NEMA type 1 enclosure with a size S2 controller requires a standard size enclosure. All other enclosure types may be standard size.

3RE4 Factory Modifications

Selection Information

- These tables apply to 3RE4 products.
- Replace the last two characters of the 3RE4 catalog number (Y0), with a code selected from the tables below.

Fwd-Off-Rev Selector Switch Combinations

Description	Code (Y0)	Restrictions
(No modifications included)	Y0	—
Fwd-Off-Rev Selector Switch	L3	—
Fwd-Off-Rev Selector Switch, Red On Pilot Light	L4	—
Fwd-Off-Rev Selector Switch, Red On Pilot Light, Green Off Pilot Light	L5	—
Fwd-Off-Rev Selector Switch, CPT Std Capacity① 208:120V	L6	1
Fwd-Off-Rev Selector Switch, CPT Std Capacity① 208:120V, Red On Pilot Light	L7	1
Fwd-Off-Rev Selector Switch, CPT Std Capacity① 208:120V, Red On Pilot Light, Green Off Pilot Light	L8	1
Fwd-Off-Rev Selector Switch, CPT Std Capacity① 208:24V	M0	2
Fwd-Off-Rev Selector Switch, CPT Std Capacity① 208:24V, Red On Pilot Light	M1	2
Fwd-Off-Rev Selector Switch, CPT Std Capacity① 208:24V, Red On Pilot Light, Green Off Pilot Light	M2	2
Fwd-Off-Rev Selector Switch, CPT Std Capacity① 240:120V	M3	1
Fwd-Off-Rev Selector Switch, CPT Std Capacity① 240:120V, Red On Pilot Light	M4	1
Fwd-Off-Rev Selector Switch, CPT Std Capacity① 240:120V, Red On Pilot Light, Green Off Pilot Light	M5	1
Fwd-Off-Rev Selector Switch, CPT Std Capacity① 240:24V	M6	2
Fwd-Off-Rev Selector Switch, CPT Std Capacity① 240:24V, Red On Pilot Light	M7	2
Fwd-Off-Rev Selector Switch, CPT Std Capacity① 240:24V, Red On Pilot Light, Green Off Pilot Light	M8	2
Fwd-Off-Rev Selector Switch, CPT Std Capacity① 480/240:120V	N0	1 and 3
Fwd-Off-Rev Selector Switch, CPT Std Capacity① 480/240:120V, Red On Pilot Light	N1	1 and 3
Fwd-Off-Rev Selector Switch, CPT Std Capacity① 480/240:120V, Red On Pilot Light, Green Off Pilot Light	N2	1 and 3
Fwd-Off-Rev Selector Switch, CPT Std Capacity① 480/240:24V	N3	2 and 3
Fwd-Off-Rev Selector Switch, CPT Std Capacity① 480/240:24V, Red On Pilot Light	N4	2 and 3
Fwd-Off-Rev Selector Switch, CPT Std Capacity① 480/240:24V, Red On Pilot Light, Green Off Pilot Light	N5	2 and 3

Restrictions:

1. Valid only with 120 V coil.
2. Valid only with 24 VAC coil.
3. Not valid with single-phase controllers.

① A CPT in a NEMA type 1 enclosure with a size S00 or S0 controller requires a large size enclosure. A CPT in a NEMA type 1 enclosure with a size S2 controller requires a standard size enclosure. All other enclosure types may be standard size.

3RE4 Field Modifications and Accessories

Selection

Pilot Devices

	Device①	Enclosure NEMA Type	Catalog Number
49SDPB5	Start-Stop Push Buttons, momentary②	1	**49SDPB5**
		3/3R/4/12 & 4X	**49SDP05**
49SDSBJ	Fwd-Rev-Stop Push Buttons, momentary②	1	**NA**
		3/3R/4/12 & 4X	**49SDP02**
49SDSB4	Hand-Off-Auto Selector Switch	1	**49SDSBJ**
		3/3R/4/12 & 4X	**49SDS01**
Start Push Button	On-Off Selector Switch	1	**49SDSB4**
		3/3R/4/12 & 4X	**49SDS04**
Stop Push Button	Fwd-Off-Rev Selector Switch	1	**49SDSBJ**
		3/3R/4/12 & 4X	**49SDS02**
2-Position Selector Switch			
3-Position Selector Switch			

Pilot Lights

	Device①	Enclosure NEMA Type	Voltage	Catalog Number
	Light module and lens color: RED, GREEN, and AMBER. Legends include: ON, RUN, OFF③, OLR TRIPPED④	1	24 to 240 V AC/DC	**49SDLBU**
			277 V AC	**49SDLBL**
	Red FORWARD, Red REVERSE	1	24 to 240 V AC/DC	**49SDLB7RU**
			277 V AC	**49SDLB7RL**
		3/3R/4/12 & 4X 3/3R/4/12 & 4X	24 to 240 V AC/DC	**49SDL07RU**
			277 V AC	**49SDL07RL**
	Green FORWARD, Green REVERSE	1	24 to 240 V AC/DC	**49SDLB7GU**
			277 V AC	**49SDLB7GL**
		3/3R/4/12 & 4X 3/3R/4/12 & 4X	24 to 240 V AC/DC	**49SDL07GU**
			277 V AC	**49SDL07GL**
	Red ON	3/3R/4/12 & 4X 3/3R/4/12 & 4X	24 to 240 V AC/DC	**49SDL0BRU**
			277 V AC	**49SDL0BRL**
	Red OFF③	3/3R/4/12 & 4X 3/3R/4/12 & 4X	24 to 240 V AC/DC	**49SDL0ARU**
			277 V AC	**49SDL0ARL**
	Green ON	3/3R/4/12 & 4X 3/3R/4/12 & 4X	24 to 240 V AC/DC	**49SDL0BGU**
			277 V AC	**49SDL0BGL**
	Green OFF③	3/3R/4/12 & 4X 3/3R/4/12 & 4X	24 to 240 V AC/DC	**49SDL0AGU**
			277 V AC	**49SDL0AGL**

Auxiliary Contacts

	Device	Frame Size	Catalog Number
	1 NO & 1 NC laterally mounted, screw terminals	S00	**3RH2911-1DA11**
		S0 and S2	**3RH2921-1DA11**
	2 NO laterally mounted, screw terminals	S00	**NA**
		S0 and S2	**3RH2921-1DA20**
	2 NC laterally mounted, screw terminals	S00	**3RH2911-1DA02**
		S0 and S2	**3RH2921-1DA02**

① 3SU 22 mm devices. Pilot lights include LED bulbs.
② Each contactor must have a normally open (NO) auxiliary contact available for seal-in circuit. Order separately as needed.
③ To use as an OFF indicator, the contactor must have a normally closed (NC) auxiliary contact available for the circuit. Order separately as needed.
④ To use as an overload relay (OLR) trip indicator, the OLR must have a normally open (NO) auxiliary contact available for the circuit.

3RE4 Field Modifications, Accessories, and Replacement Parts

Selection

Control Power Transformers①

Device	Frame Size	Catalog Number	Transformer Table		
			Primary Volts	Secondary Volts	Code
45 VA, 1-secondary fuse	S00	**KT*050**	120	24	1
75 VA, 2-primary and 1-secondary fuses	S0 & S2	**KT*075**	208	24	G
			208	120	H
			240/480	24	4
			240/480	120	8
			277	24	5
			277	120	7
			600	24	6
			600	120	9

► Replace * with code from Transformer Table.
► 45VA CPT does not require primary fuses per NEC.

Control Relays and Timers①②

Relay **Timer**

Device	Catalog Number	Coil Voltage Table	
		Voltage	Code
Control relay, 4 NO / 0 NC	**3RH2140-1●●●0**	24 VAC 50/60 Hz	AB0
Control relay, 3 NO / 1 NC	**3RH2131-1●●●0**	24 VDC	BB4
Control relay, 2 NO / 2 NC	**3RH2122-1●●●0**	110/120 VAC 50/60 Hz	AK6
ON-delay timer, 0.05 sec. – 100 hr., 24 – 240V AC/DC	**3RP2525-1BW30**	208 VAC 50/60 Hz	AM2
OFF-delay timer, 0.05 sec. – 100 hr., 24 – 240V AC/DC	**3RP2535-1AW30**	220/240 VAC 50/60 Hz	AP6
		277 VAC 60 Hz	—
		480 VAC 60 Hz	AV6
		600 VAC 60 Hz	—

► Replace ●●● with code from Coil Voltage Table.
► Relays and timers include screw terminals.

Miscellaneous

3NW7513-0HG **8WA1808**

75D28182001 **MTR5**

Device	Catalog Number
1-pole fuse block for control circuit, 600V / 30A, DIN rail mounted, CC fuses (not included)	**3NW7513-0HG**
2-pole fuse block for control circuit, 600V / 30A, DIN rail mounted, CC fuses (not included)	**3NW7523-0HG**
Ground Lug, 3 Conductor, 2-14 AWG AL/CU Wire	**75D28182001**
Terminal block, 1-point unwired, DIN rail mounted, 6mm, 26A②	**8WA10111DF11**
End retainer for DIN rail②	**8WA1808**
DIN rail kit, 35mm x 5 in, for mounting optional accessories①	**MTR5**
Sealable cover for rotary dial on overload relay (10 per package)	**3RV29 08-0P**

Replacement Parts

Device	Catalog Number
Contactor parts (Obtain Cat. No. from device and refer to Industrial Control Catalog).	—
Overload relay (Obtain Cat. No. from device and refer to Industrial Control Catalog).	—
Overload Relay Reset Operator for all NEMA Type enclosures	**49MBRS**

Enclosure Kits

Controller Frame Size & Type NR = Non-Reversing R = Reversing	Type 1 Standard Size Catalog Number	Type 1 Large Size⑤ Catalog Number	Type 3/3R/4/12 Standard Size⑥ Catalog Number	Type 4X 304 S.S. Standard Size⑥ Catalog Number
S00 NR, S0 NR	**49EC14EB110705R**	**49EC14GB140807R③**	**49EFN121006XRX**	**49EFW121006XRX**
S00 R, S0 R	**49EC14GB140807R③**	**49EC14IB201208R④**	**49EFN121006XRX**	**49EFW121006XRX**
S2 NR, S2 R	**49EC14IB201208R④⑥**	**—**	**49EFN141208XRX**	**49EFW141208XRX**

① The accessory in a NEMA type 1 enclosure requires a large size enclosure. All other enclosure types may be standard size.
② Requires DIN rail kit or equivalent.
③ Enclosure 49EC14GB140807R requires mounting adaptor plate 49EFA070500XXA which is sold seperately.
④ Enclosure 49EC14IB201208R requires mounting adaptor plate 49EFA060800XXA which is sold seperately.
⑤ These large enclosures are required for certain accessories as indicated in the Field Modification pages.
⑥ These standard size enclosures include extra mounting space for accessories.

3RE4 Outline Diagrams

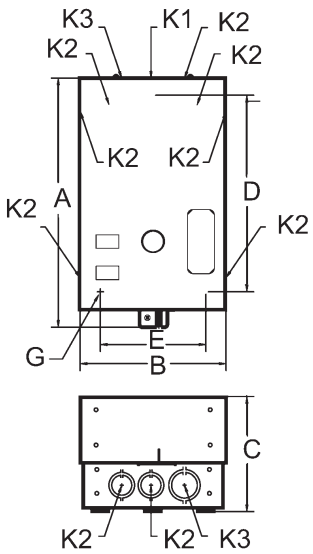

Figure 1

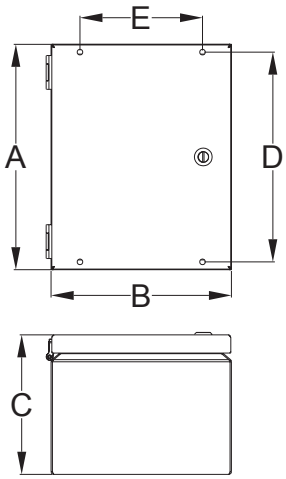

Figure 2

3RE4 Non-Combination Type Controllers

Enclosure Type	Contactor Rating	Fig.	Outline Dimensions			Mounting		Conduit Size		
			A	B	C	D	E	K1	K2	K3
1 (standard size)	S00 NR, S0 NR	1	10.97	6.41	5.03	8.22	4.62	0.5	0.50-0.75	0.75–1
	S00 R, S0 R	1	13.53	7.97	6.38	10.25	6.00	0.50-0.75	0.75-1	1-1.25
	S2 NR, S2 R	1	19.12	11.38	7.69	15.62	8.25	0.50-0.75	1-1.25	1.5-2
1 (large size)	S00 NR, S0 NR	1	13.53	7.97	6.38	10.25	6.00	0.50-0.75	0.75-1	1-1.25
	S00 R, S0 R	1	19.12	11.38	7.69	15.62	8.25	0.50-0.75	1-1.25	1.5-2
3/3R/4/12 & 4X 304 SS	S00 NR, S00 R, S0 NR, S0 R	2	12.00	10.00	6.00	11.30	7.44	—	—	—
	S2 NR, S2 R	2	14.00	12.00	8.00	13.30	9.44	—	—	—

Sxx = Frame size; NR = Non-reversing; R = Reversing
Mounting screw G is 0.25”.
Dimensions are in inches.

Non-combination non-reversing starter,1-phase, 2-pole

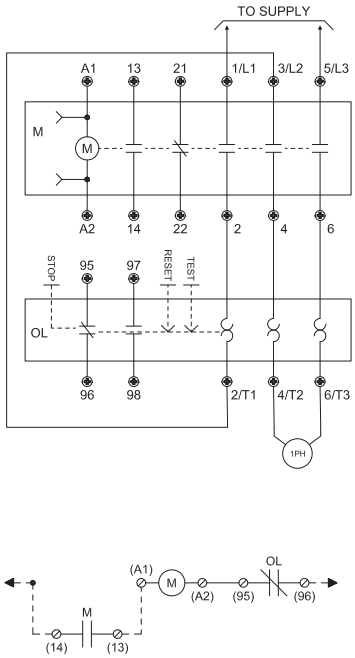

Non-combination non-reversing starter,3-phase, 3-pole

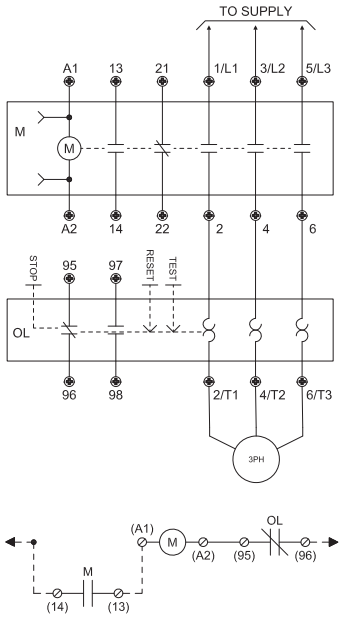

Non-combination reversing starter, 3-phase, 3-pole

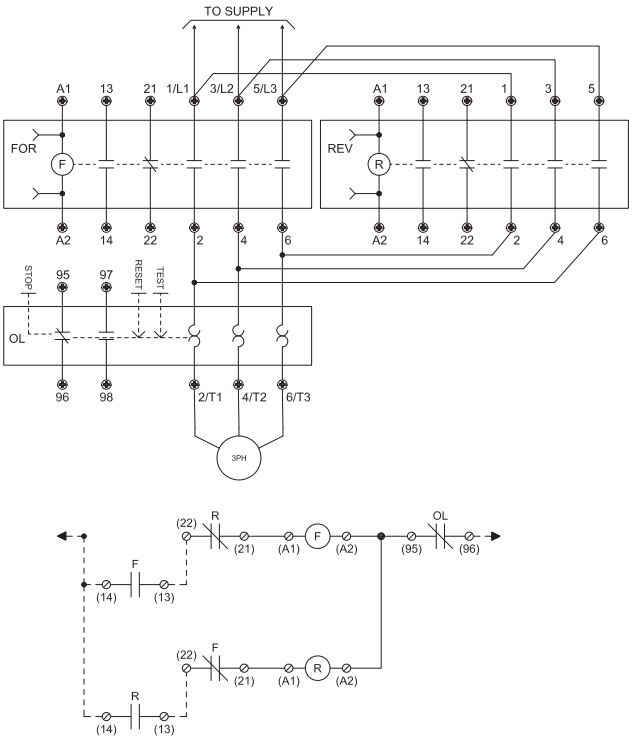

Non-combination non-reversing contactor,1-phase, 2-pole

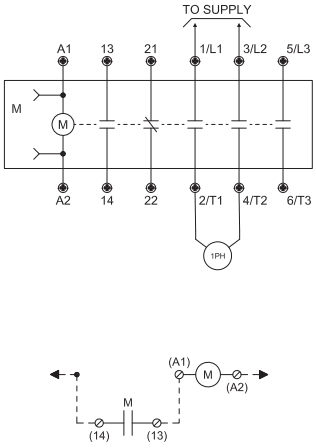

Non-combination non-reversing contactor,3-phase, 3-pole

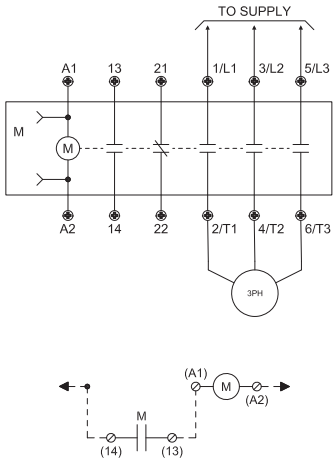

Non-combination reversing contactor, 1-phase, 3-wlre, 2-pole

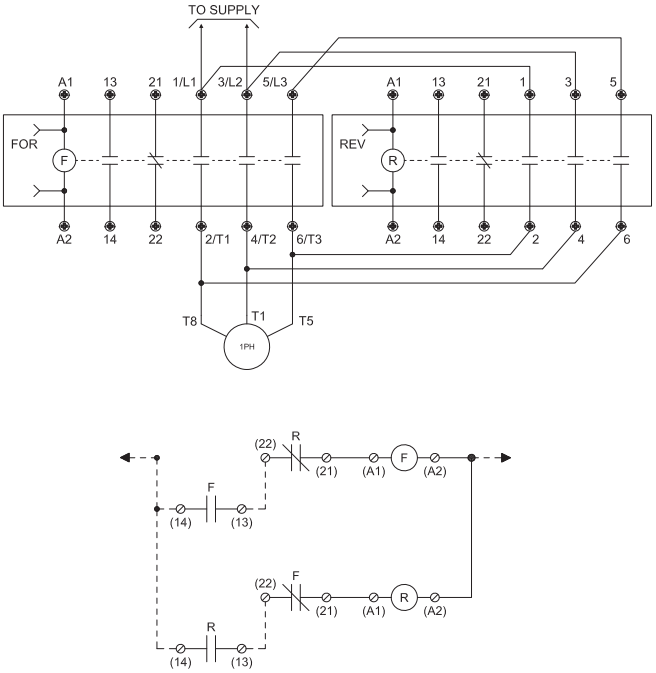

Non-combination reversing contactor, 3-phase, 3-pole

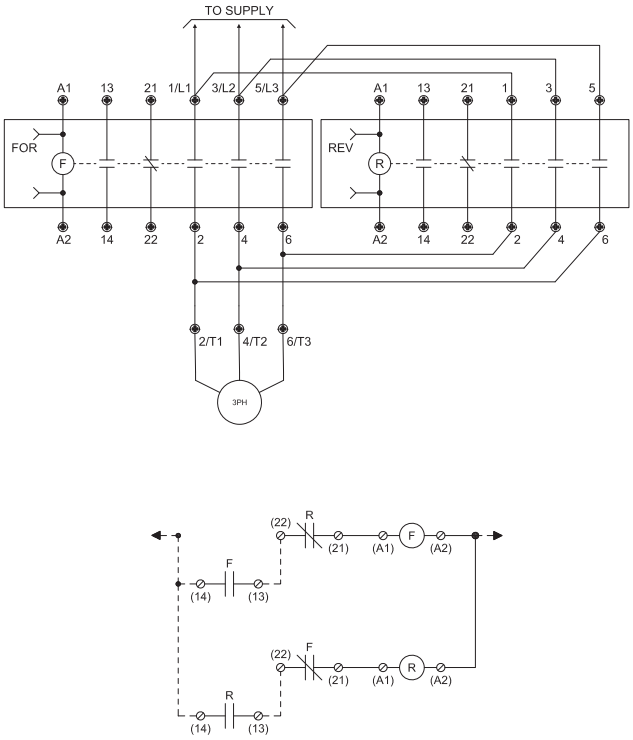

3RE4 Wiring Diagrams

Technical information

Control options for non-reversing starters

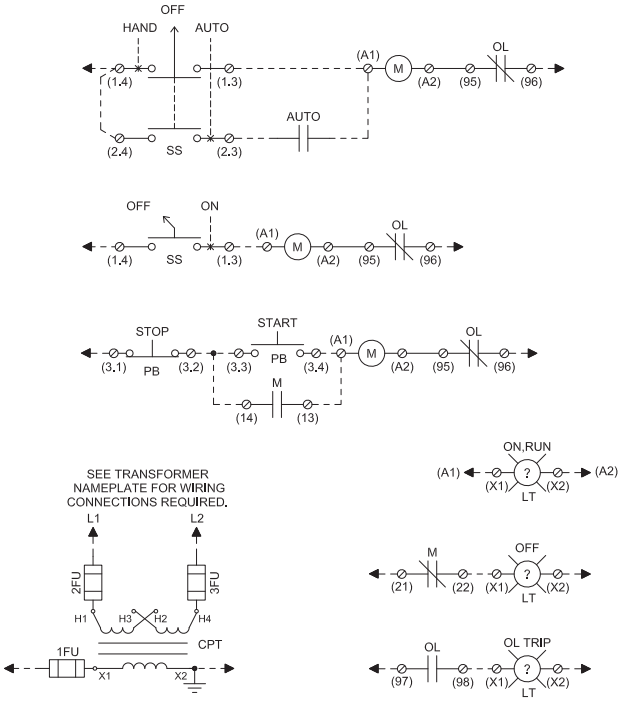

Control options for non-reversing contactors

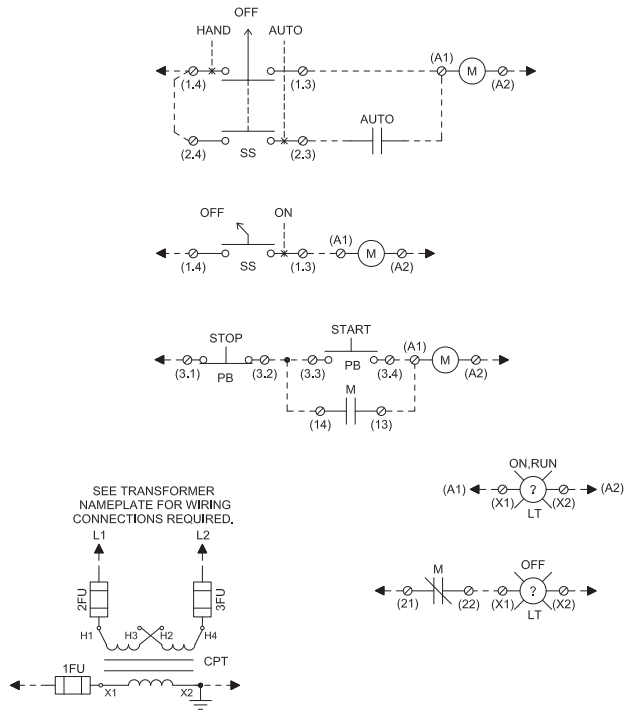

Control options for reversing starters

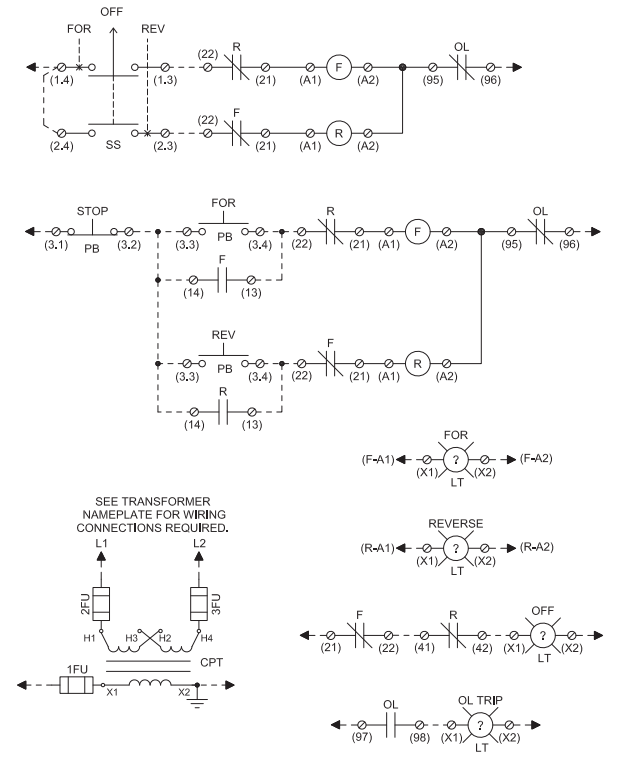

Control options for reversing contactors

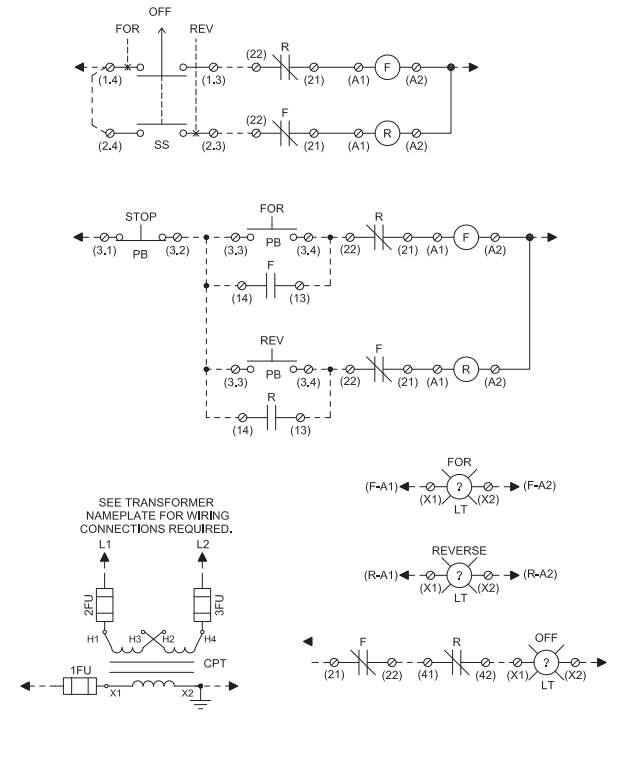

Notes